US 20160197859A1

(19) **United States**

(12) **Patent Application Publication**

Weaver et al.

(10) **Pub. No.: US 2016/0197859 A1**

(43) **Pub. Date: Jul. 7, 2016**

(54) **MULTIPLE PERSONALITIES**

(71) Applicant: **Microsoft Technology Licensing, LLC**, Redmond, WA (US)

(72) Inventors: **Andrew Weaver**, Herndon, VA (US); **Eric Jeffrey Wolf**, Alexandria, VA (US); **Julie McCool**, Reston, VA (US); **Julie Mills**, Reston, VA (US); **Brian Heikes**, Ashburn, VA (US)

(73) Assignee: **Microsoft Technology Licensing, LLC**, Redmond, WA (US)

(21) Appl. No.: **14/962,168**

(22) Filed: **Dec. 8, 2015**

Related U.S. Application Data

(63) Continuation of application No. 13/317,023, filed on Oct. 7, 2011, now Pat. No. 9,215,095, which is a continuation of application No. 10/847,463, filed on May 18, 2004, now Pat. No. 8,037,150, which is a continuation-in-part of application No. 10/715,209, filed on Nov. 18, 2003, now Pat. No. 7,636,751.

(60) Provisional application No. 60/427,941, filed on Nov. 21, 2002, provisional application No. 60/488,399, filed on Jul. 21, 2003.

Publication Classification

(51) **Int. Cl.**

H04L 12/58	(2006.01)
H04L 29/06	(2006.01)
H04L 29/08	(2006.01)

(52) **U.S. Cl.**

CPC ***H04L 51/04*** (2013.01); ***H04L 67/141*** (2013.01); ***H04L 63/0428*** (2013.01)

(57) **ABSTRACT**

A computer implemented method enables perception of multiple online personas in an instant messaging communications session by identifying at least two identities within a communications environment to whom messages may be directed, and by enabling a first persona of a user to be projected to a first of the identities while concurrently enabling a second persona of the same user to be projected to a second of the identities.

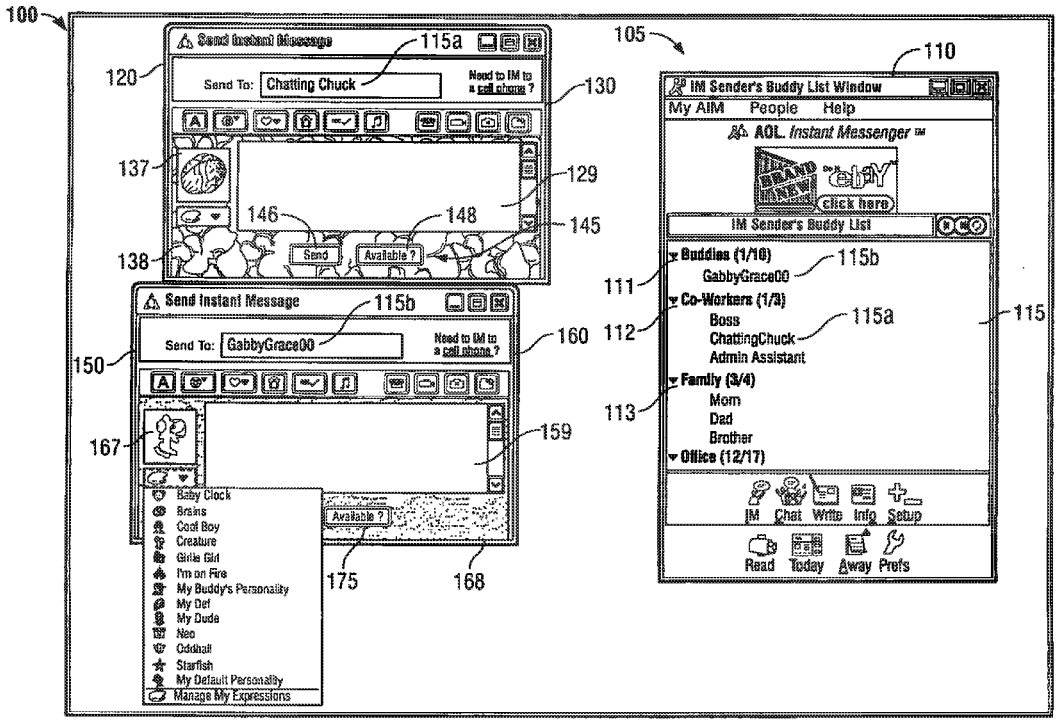

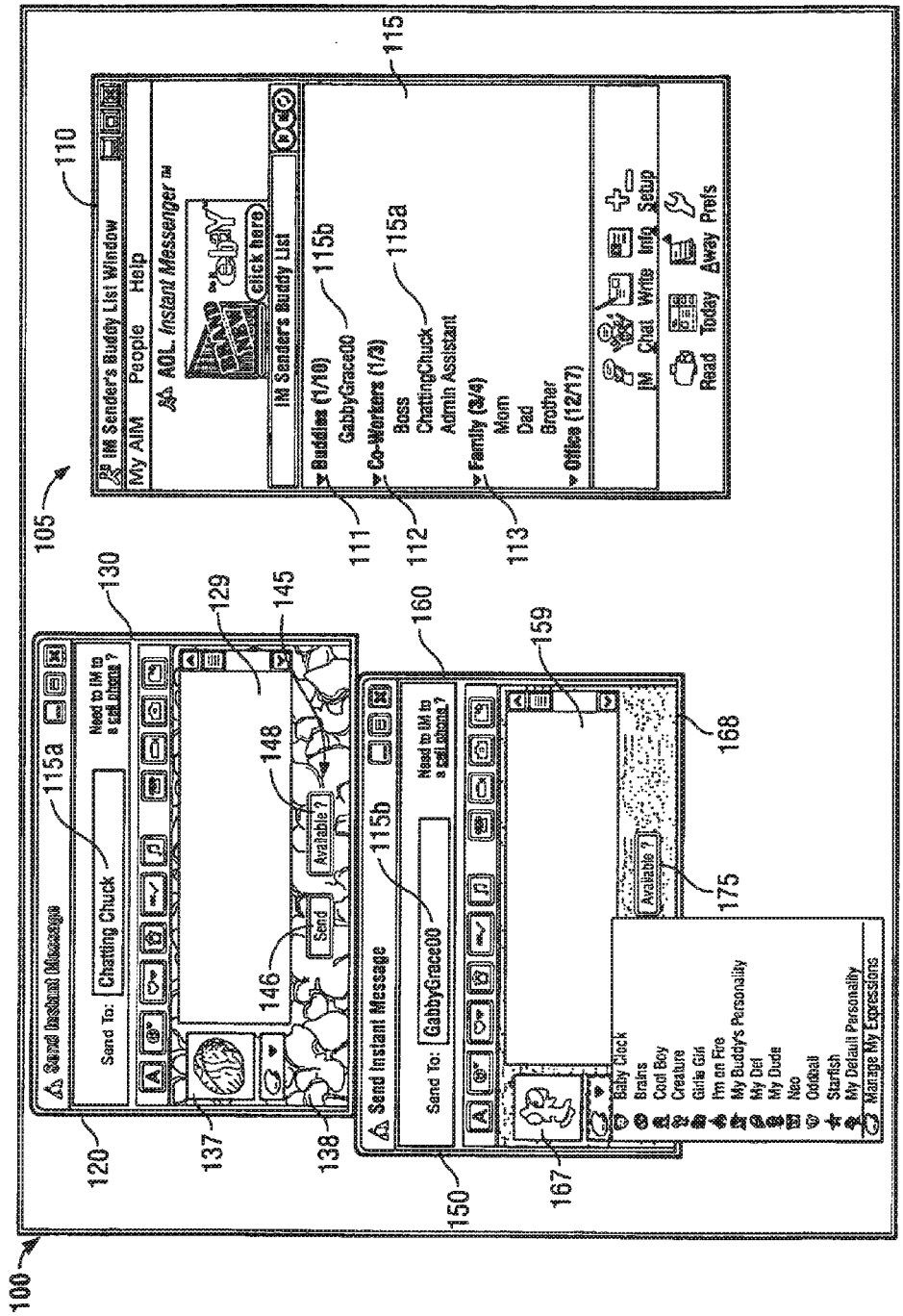
100
105
110
115
IM Sender's Buddy List Window
My AIM People Help
AOL Instant Messenger
IM Sender's Buddy List
Buddies (1/10)
GabbyGrace00
Co-Workers (1/3)
Boss
ChattingChuck
Admin Assistant
Family (3/4)
Mom
Dad
Brother
Offices (12/17)
IM Chat Write Info Setup
Read Today Away Prefs
111
112
113
115a
115b
120
129
130
137
138
145
146
148
150
159
160
167
168
175
Send Instant Message
Send To: ChattingChuck
Need to IM to a cell phone?
Send To: GabbyGrace00
Available?
Send
Baby Clock
Brains
Cool Boy
Creature
Girlie Girl
I'm on Fire
My Buddy's Personality
My Diet
My Dude
Neo
Oddball
Starfish
My Default Personality
Manage My Expressions

FIG. 1

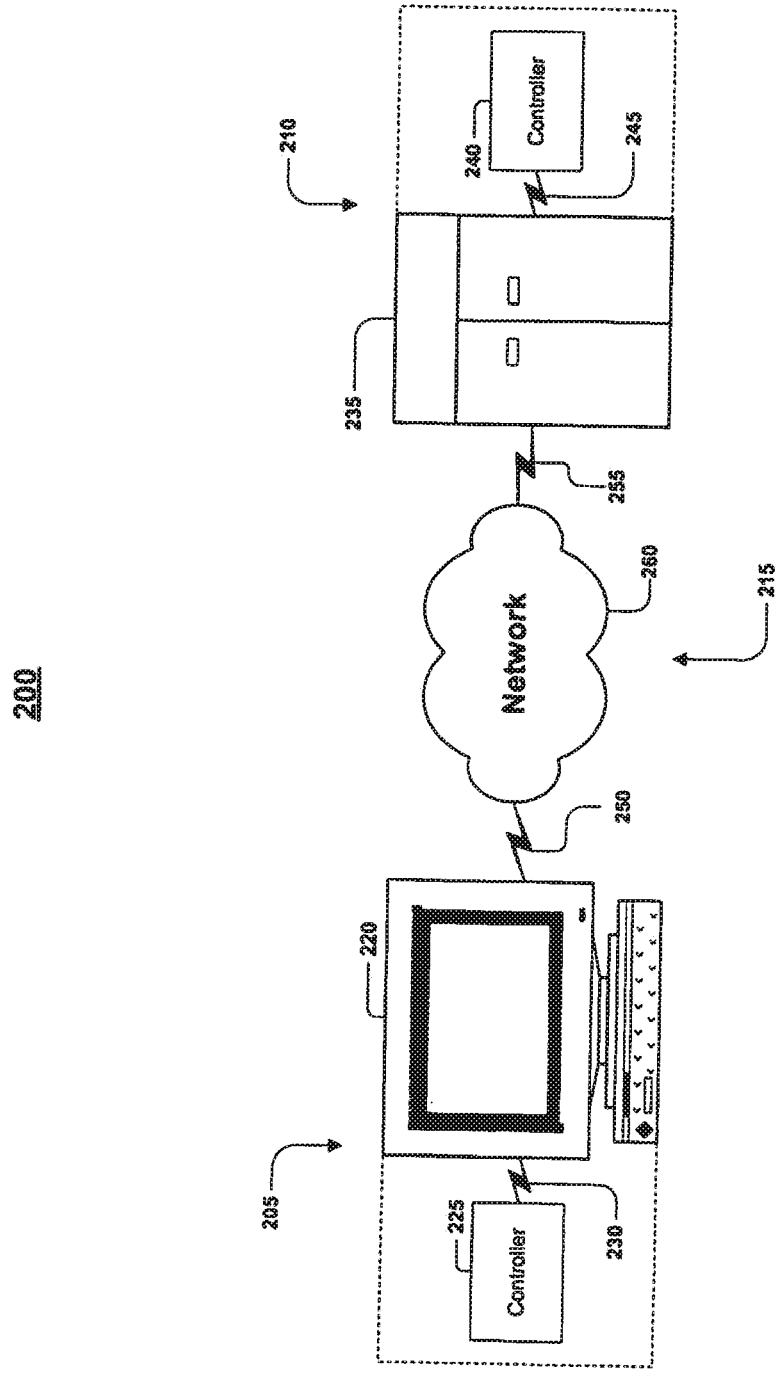
200
210
Controller
240
245
235
255
Network
260
215
250
220
205
225
Controller
230

Fig. 2

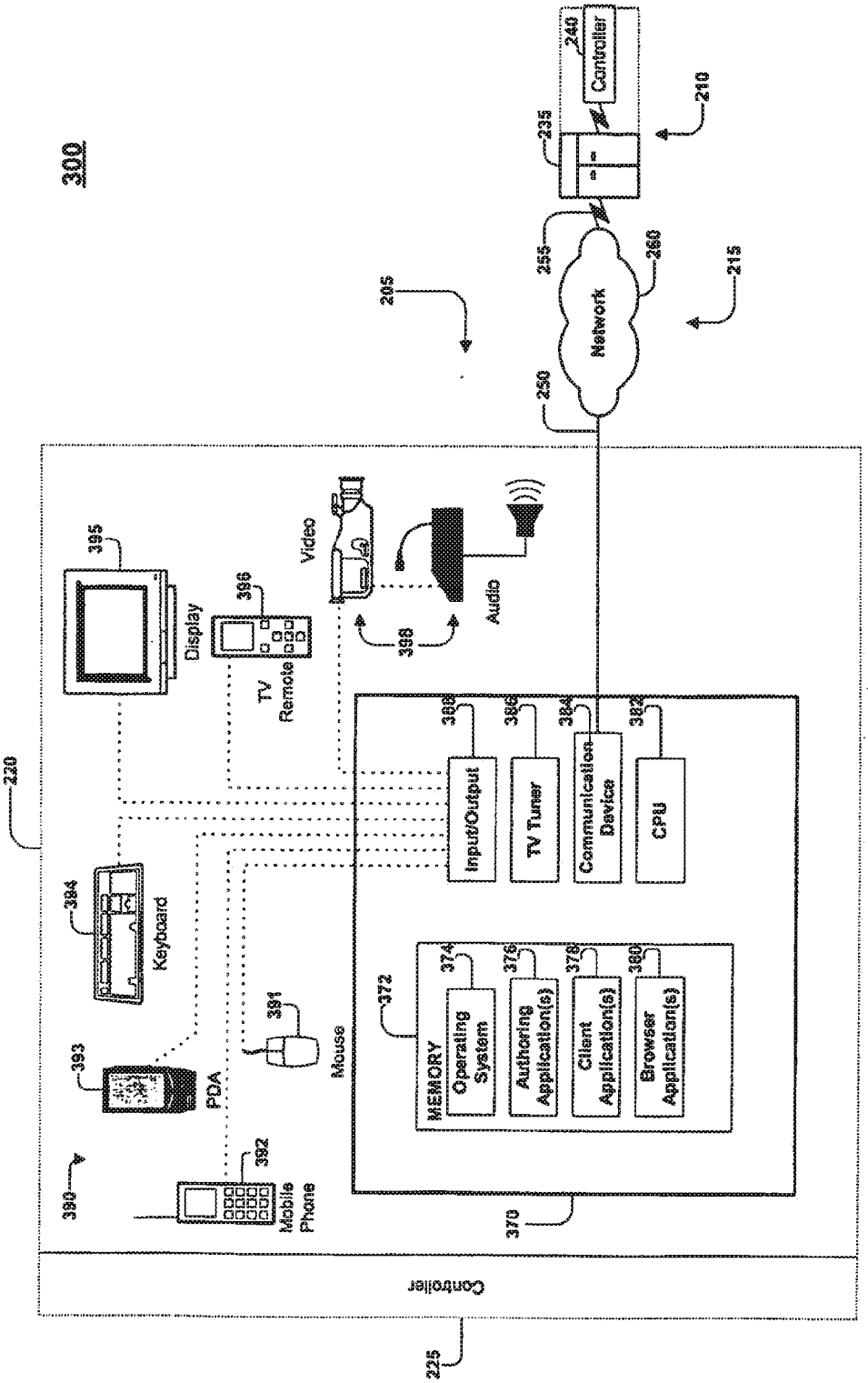
300
205
210
215
220
225
235
240
Controller
255
260
Network
250
395
Display
396
TV Remote
Video
Audio
398
388
Input/Output
386
TV Tuner
384
Communication Device
382
CPU
384
Keyboard
393
PDA
391
Mouse
372
MEMORY
374
Operating System
376
Authoring Application(s)
378
Client Application(s)
380
Browser Application(s)
390
392
Mobile Phone
370
Controller

Fig. 3

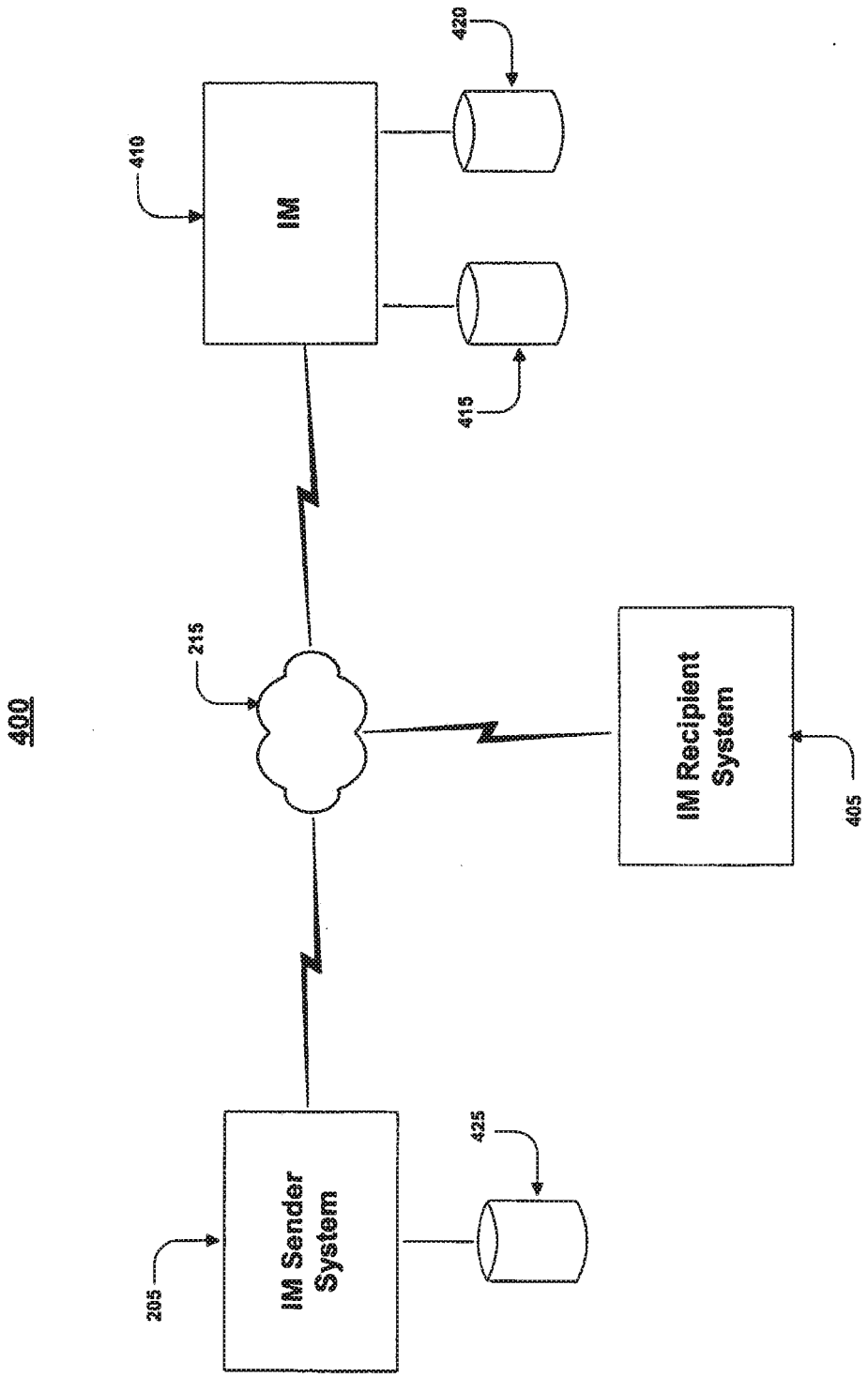
400
IM
410
420
415
215
IM Recipient System
405
IM Sender System
205
425

Fig. 4

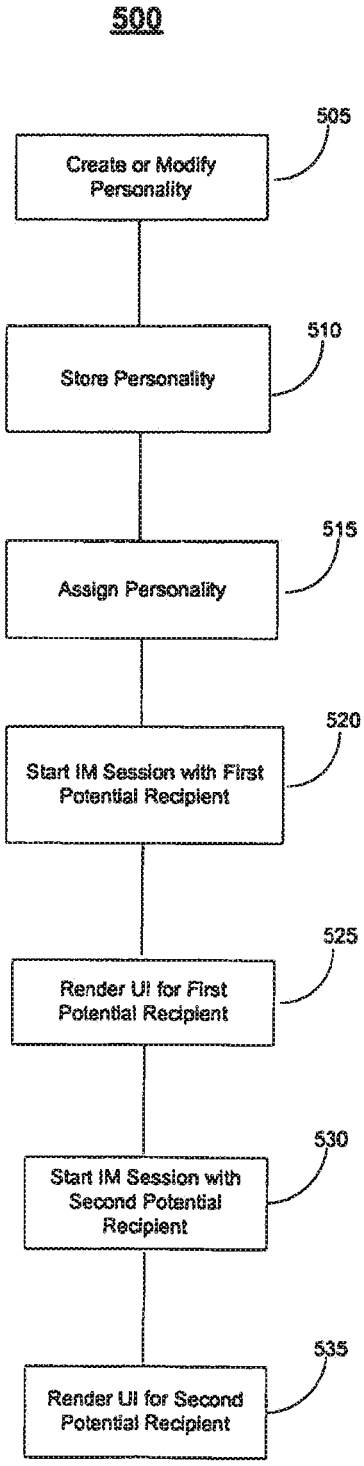
500
505
Create or Modify Personality
510
Store Personality
515
Assign Personality
520
Start IM Session with First Potential Recipient
525
Render UI for First Potential Recipient
530
Start IM Session with Second Potential Recipient
535
Render UI for Second Potential Recipient

Fig. 5

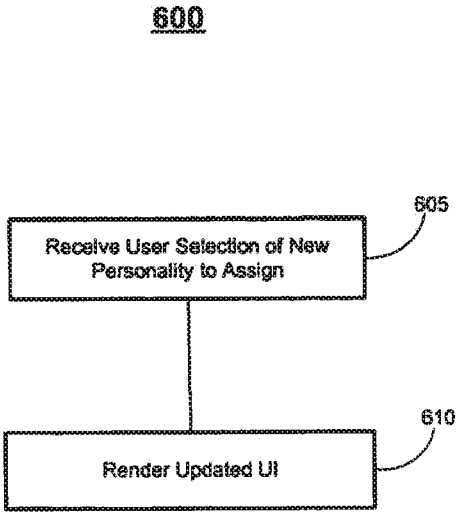
600
605
Receive User Selection of New Personality to Assign
610
Render Updated UI

Fig. 6

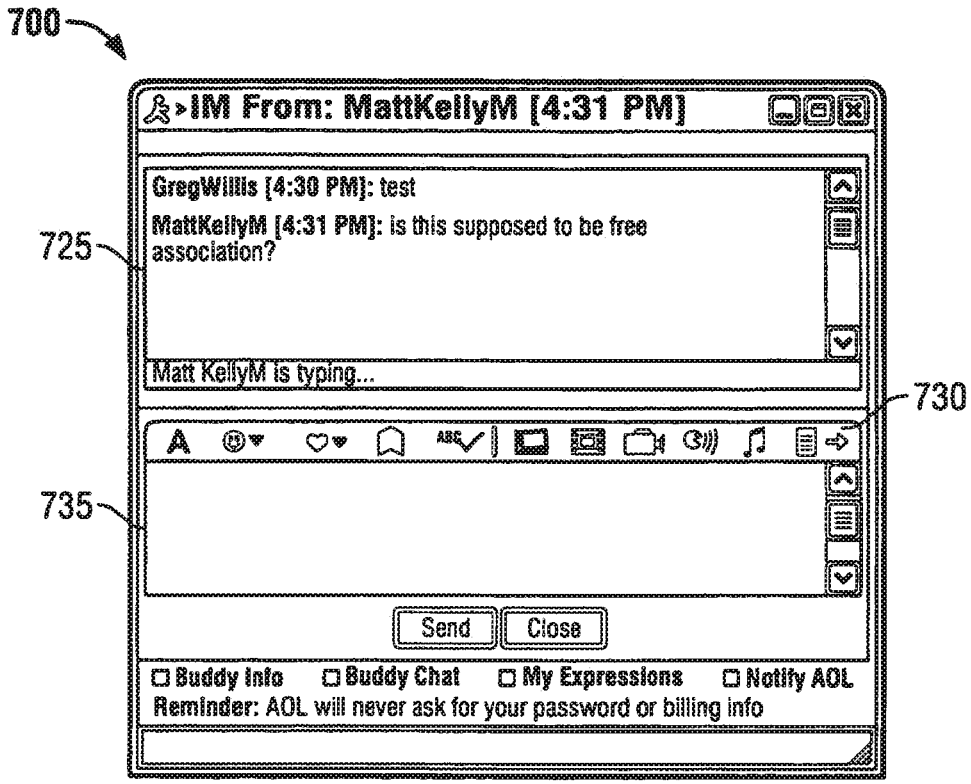
700
IM From: MattKellyM [4:31 PM]
GregWillis [4:30 PM]: test
MattKellyM [4:31 PM]: is this supposed to be free association?
725
Matt KellyM is typing...
730
735
Send
Close
Buddy Info
Buddy Chat
My Expressions
Notify AOL
Reminder: AOL will never ask for your password or billing info

FIG. 7

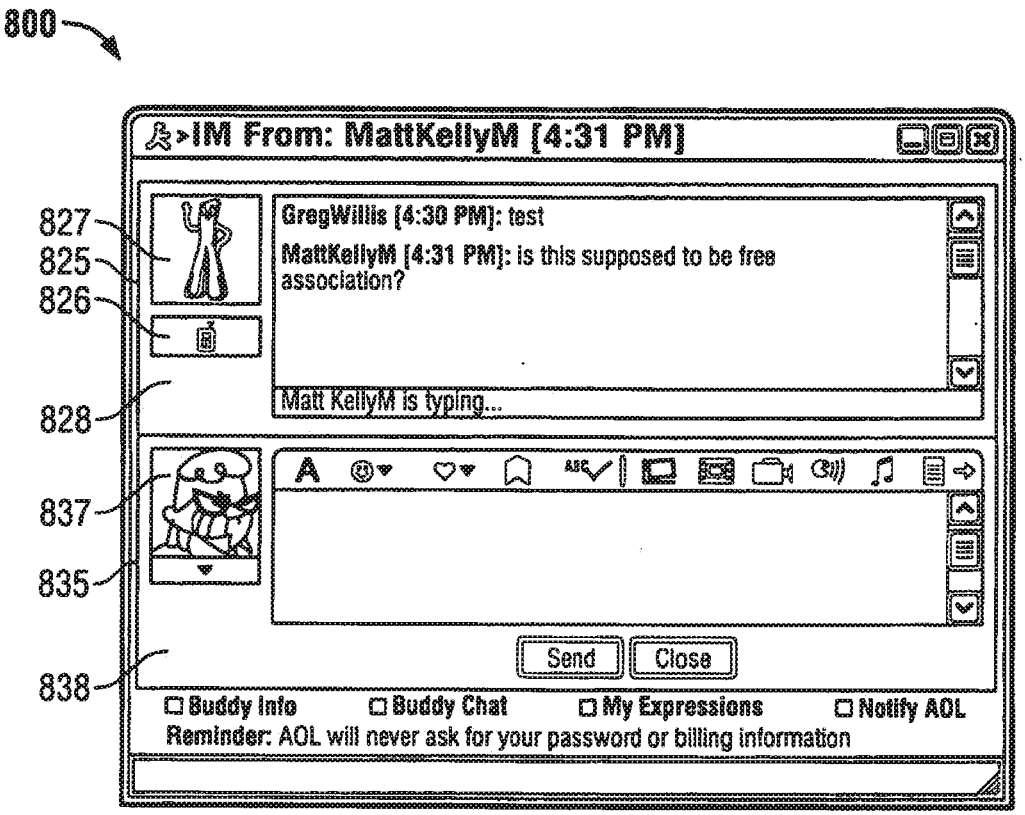
800
IM From: MattKellyM [4:31 PM]
827
825
826
828
837
835
838
GregWillis [4:30 PM]: test
MattKellyM [4:31 PM]: is this supposed to be free association?
Matt KellyM is typing...
Send
Close
Buddy Info
Buddy Chat
My Expressions
Notify AOL
Reminder: AOL will never ask for your password or billing information

FIG. 8

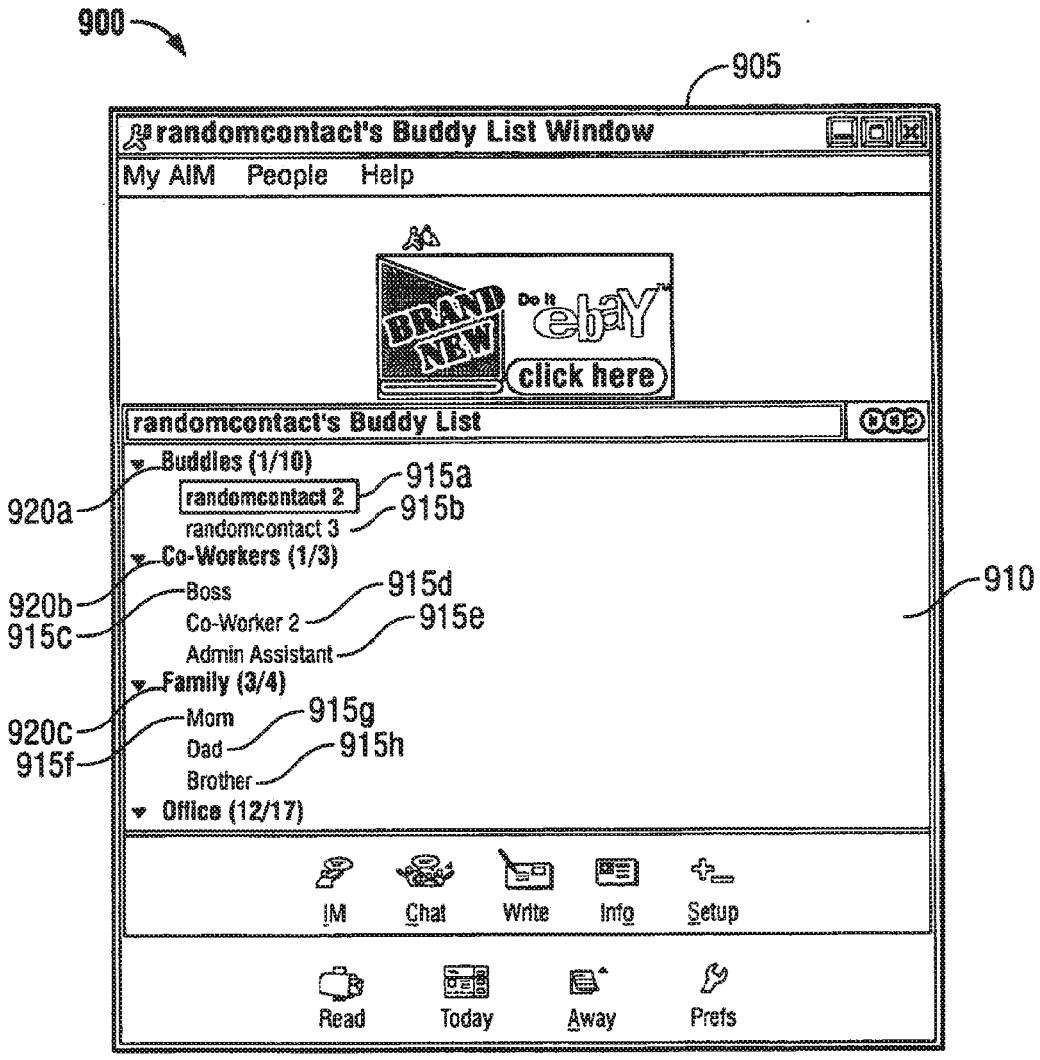
900
905
randomcontact's Buddy List Window
My AIM People Help
BRAND NEW
Do it ebaY
click here
randomcontact's Buddy List
Buddies (1/10)
randomcontact 2
randomcontact 3
Co-Workers (1/3)
Boss
Co-Worker 2
Admin Assistant
Family (3/4)
Mom
Dad
Brother
Office (12/17)
IM
Chat
Write
Info
Setup
Read
Today
Away
Prefs
920a
915a
915b
920b
915c
915d
915e
920c
915f
915g
915h
910

FIG. 9

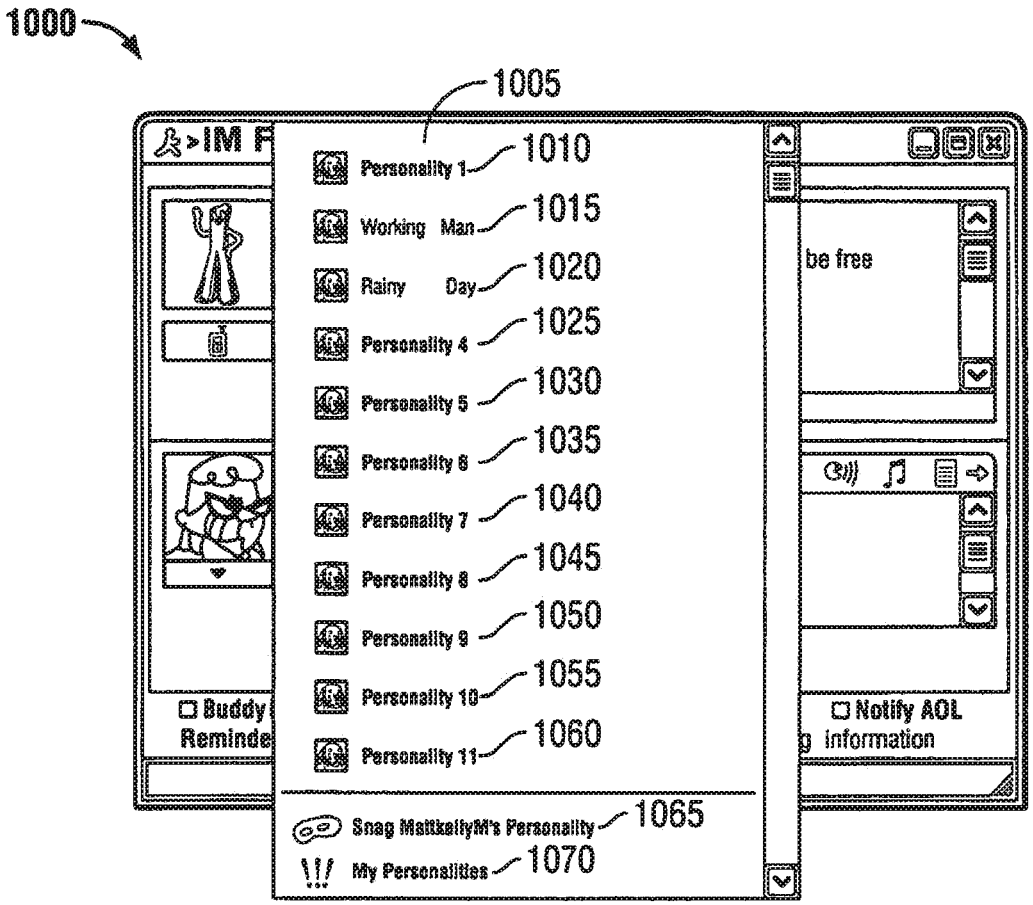
1000
1005
IM F
Personality 1
1010
Working Man
1015
Rainy Day
1020
Personality 4
1025
Personality 5
1030
Personality 6
1035
Personality 7
1040
Personality 8
1045
Personality 9
1050
Personality 10
1055
Personality 11
1060
Snag MattkellyM's Personality
1065
My Personalities
1070
be free
Buddy
Reminde
Notify AOL
information

FIG. 10

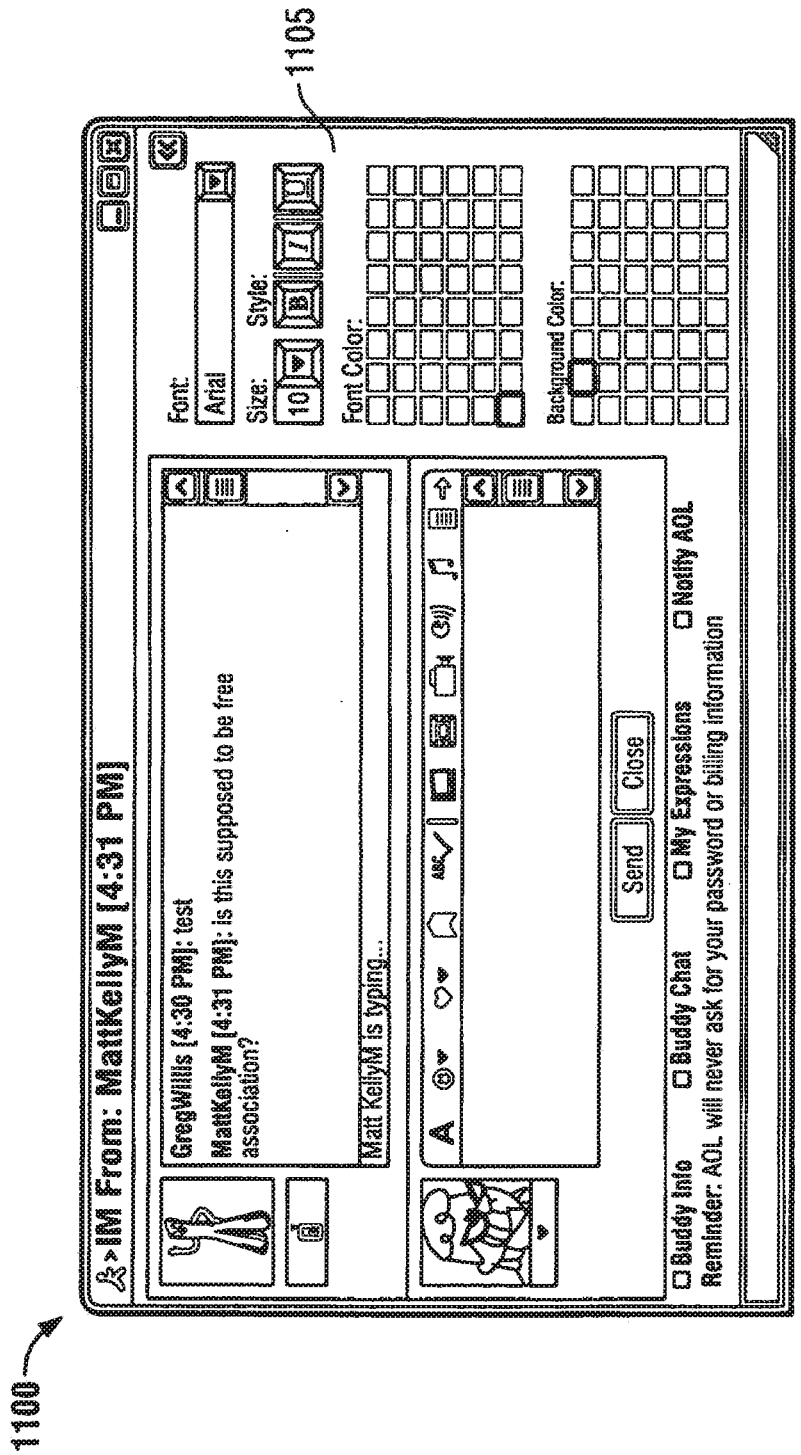
1100
1105
IM From: MattKellyM [4:31 PM]
GregWillis [4:30 PM]: test
MattKellyM [4:31 PM]: is this supposed to be free association?
Matt KellyM is typing...
Font:
Arial
Size:
10
Style:
Font Color:
Background Color:
Send
Close
Buddy Info
Buddy Chat
My Expressions
Notify AOL
Reminder: AOL will never ask for your password or billing information

FIG. 11

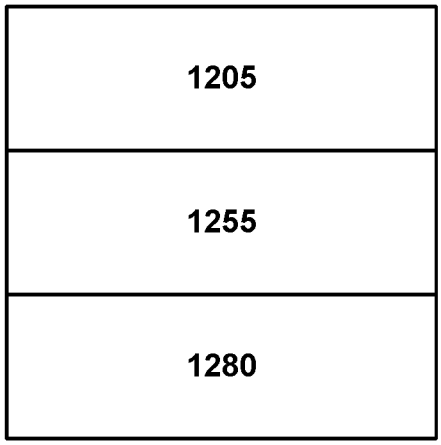

FIG. 12

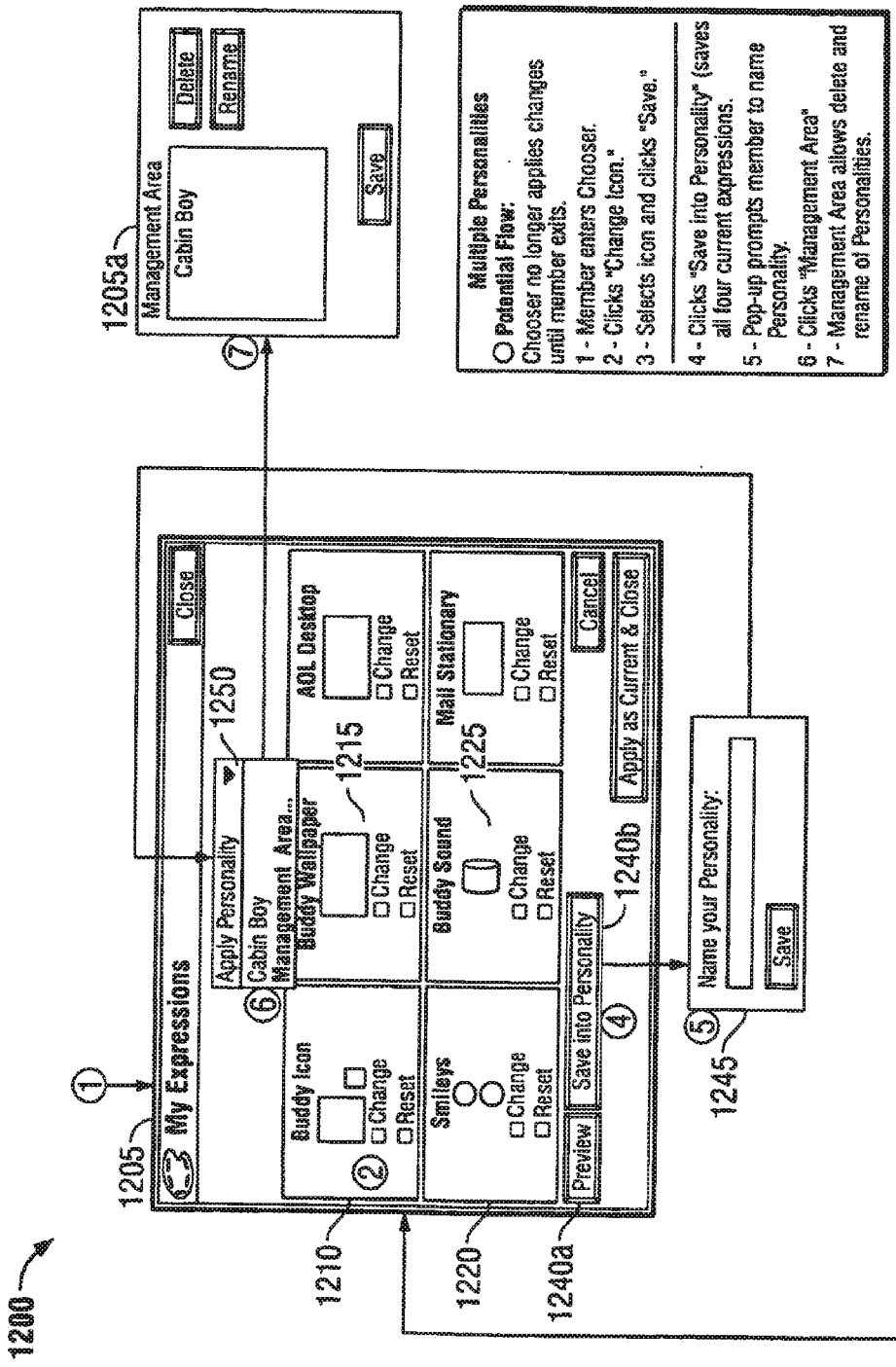
1200
1205
My Expressions
Close
Apply Personality
Cabin Boy
Management Area...
1250
Buddy Icon
Change
Reset
Buddy Wallpaper
Change
Reset
1215
AOL Desktop
Change
Reset
Smileys
Change
Reset
Buddy Sound
Change
Reset
1225
Mail Stationary
Change
Reset
Cancel
Apply as Current & Close
Preview
Save into Personality
1240b
1240a
1210
1220
1245
Name your Personality:
Save
1205a
Management Area
Cabin Boy
Delete
Rename
Save
Multiple Personalities
Potential Flow:
Chooser no longer applies changes until member exits.
1 - Member enters Chooser.
2 - Clicks "Change Icon."
3 - Selects icon and clicks "Save."
4 - Clicks "Save into Personality" (saves all four current expressions.
5 - Pop-up prompts member to name Personality.
6 - Clicks "Management Area"
7 - Management Area allows delete and rename of Personalities.
A

FIG. 12A

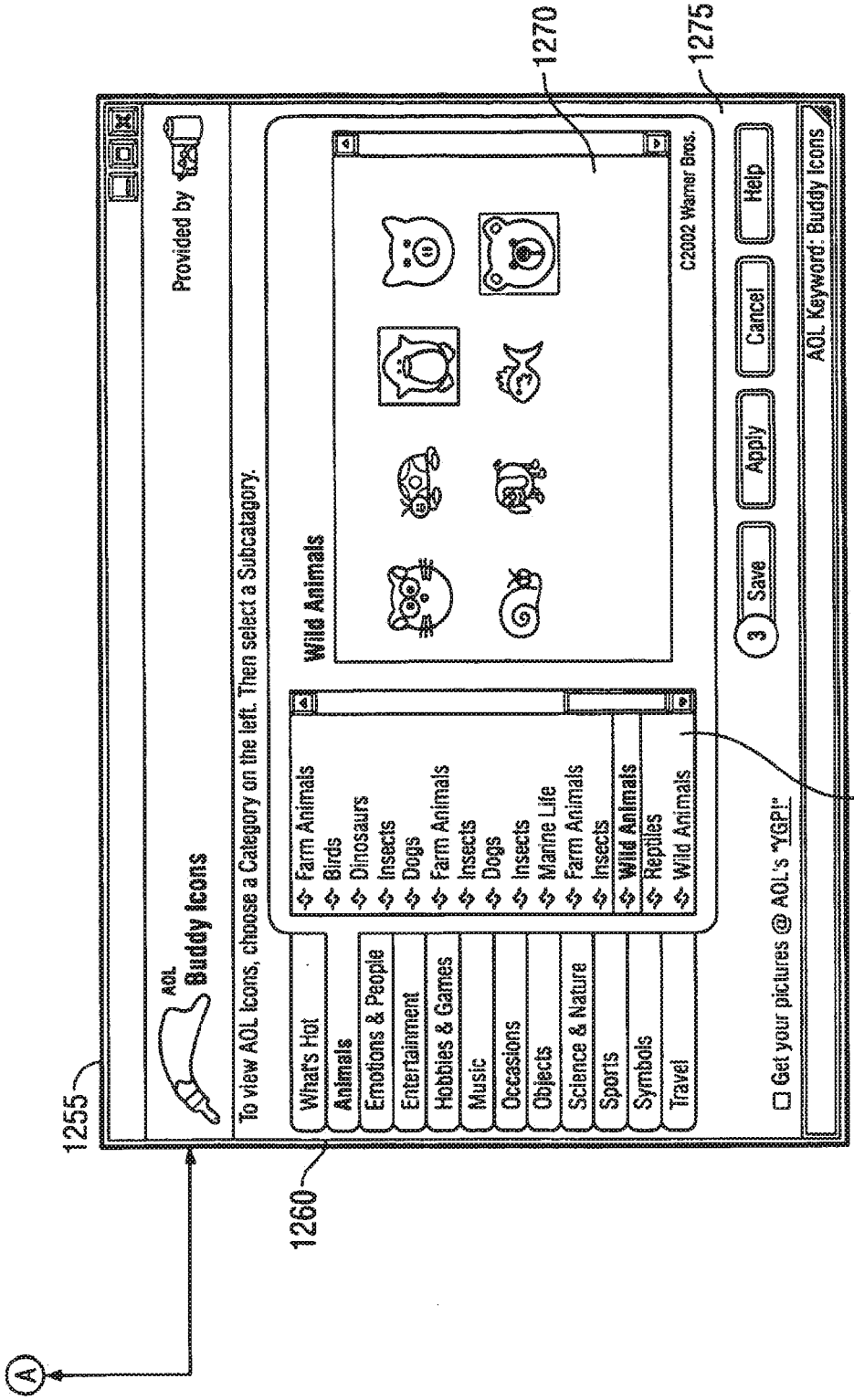
A
1255
1260
1265
1270
1275
AOL Buddy Icons
Provided by
To view AOL Icons, choose a Category on the left. Then select a Subcatagory.
What's Hot
Animals
Emotions & People
Entertainment
Hobbies & Games
Music
Occasions
Objects
Science & Nature
Sports
Symbols
Travel
Farm Animals
Birds
Dinosaurs
Insects
Dogs
Farm Animals
Insects
Dogs
Insects
Marine Life
Farm Animals
Insects
Wild Animals
Reptiles
Wild Animals
Wild Animals
©2002 Warner Bros.
3
Save
Apply
Cancel
Help
Get your pictures @ AOL's "YGP!"
AOL Keyword: Buddy Icons

FIG. 12B

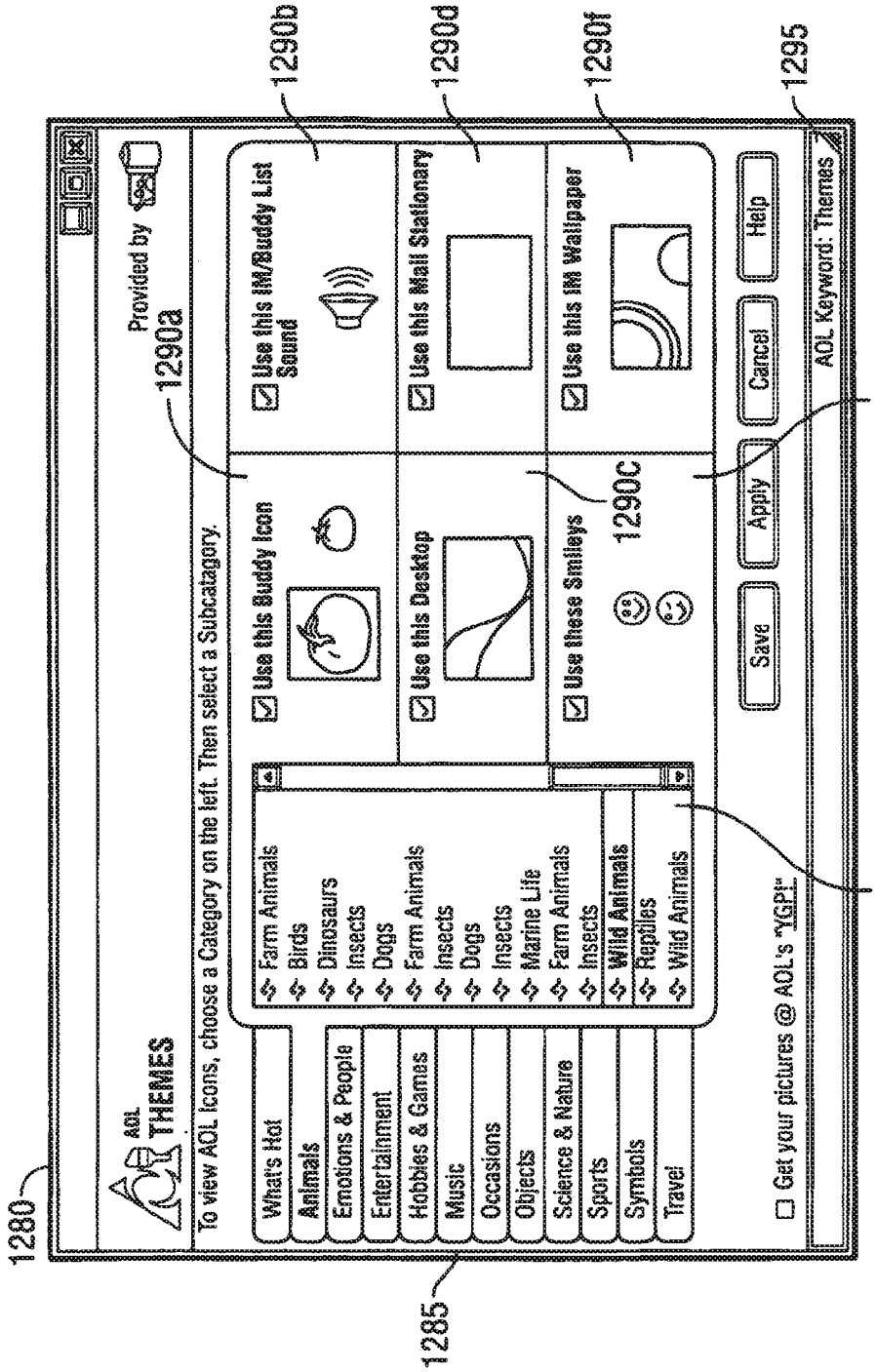
1280
AOL THEMES
Provided by
1290a
To view AOL Icons, choose a Category on the left. Then select a Subcategory.
1290b
Use this IM/Buddy List Sound
1290d
Use this Mail Stationary
1290f
Use this IM Wallpaper
Use this Buddy Icon
Use this Desktop
Use these Smileys
1290c
What's Hot
Animals
Emotions & People
Entertainment
Hobbies & Games
Music
Occasions
Objects
Science & Nature
Sports
Symbols
Travel
Farm Animals
Birds
Dinosaurs
Insects
Dogs
Farm Animals
Insects
Dogs
Insects
Marine Life
Farm Animals
Insects
Wild Animals
Reptiles
Wild Animals
1285
1290
Save
Apply
Cancel
Help
1290e
Get your pictures @ AOL's "YGP!"
AOL Keyword: Themes
1295

FIG. 12C

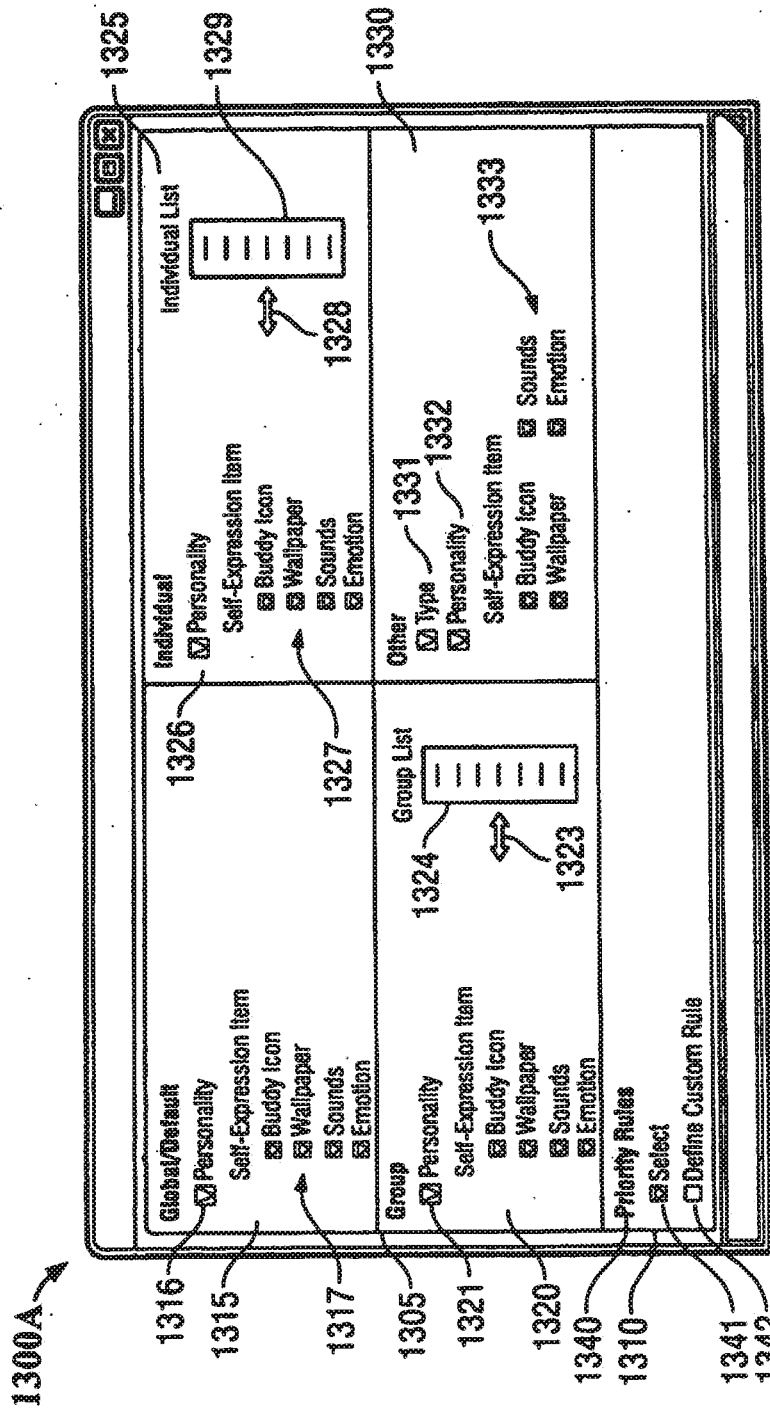
1300A
1325
1329
1330
1316
1315
1317
1305
1321
1320
1340
1310
1341
1342
1326
1327
1328
1323
1324
1331
1332
1333
Global/Default
Personality
Self-Expression Item
Buddy Icon
Wallpaper
Sounds
Emotion
Individual
Individual List
Group
Group List
Other
Type
Priority Rules
Select
Define Custom Rule

FIG. 13A

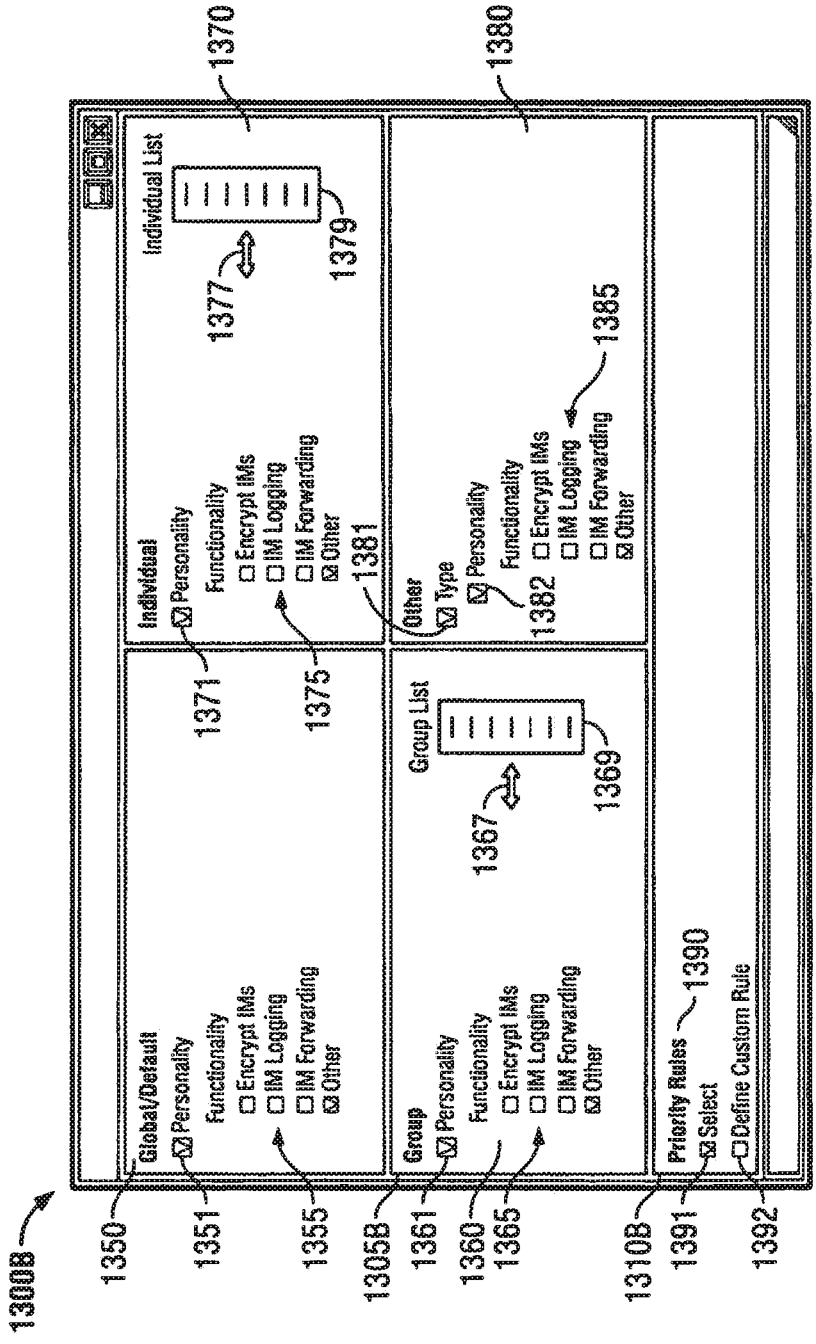
1300B
1350
Global/Default
Personality
Functionality
Encrypt IMs
IM Logging
IM Forwarding
Other
1351
1355
1305B
1361
Group
Personality
Functionality
Encrypt IMs
IM Logging
IM Forwarding
Other
1360
1365
1310B
1391
Priority Rules
Select
Define Custom Rule
1390
1392
1371
1375
Individual
Personality
Functionality
Encrypt IMs
IM Logging
IM Forwarding
Other
1381
1370
Individual List
1377
1379
1367
Group List
1369
Other
Type
Personality
Functionality
Encrypt IMs
IM Logging
IM Forwarding
Other
1382
1380
1385

FIG. 13B

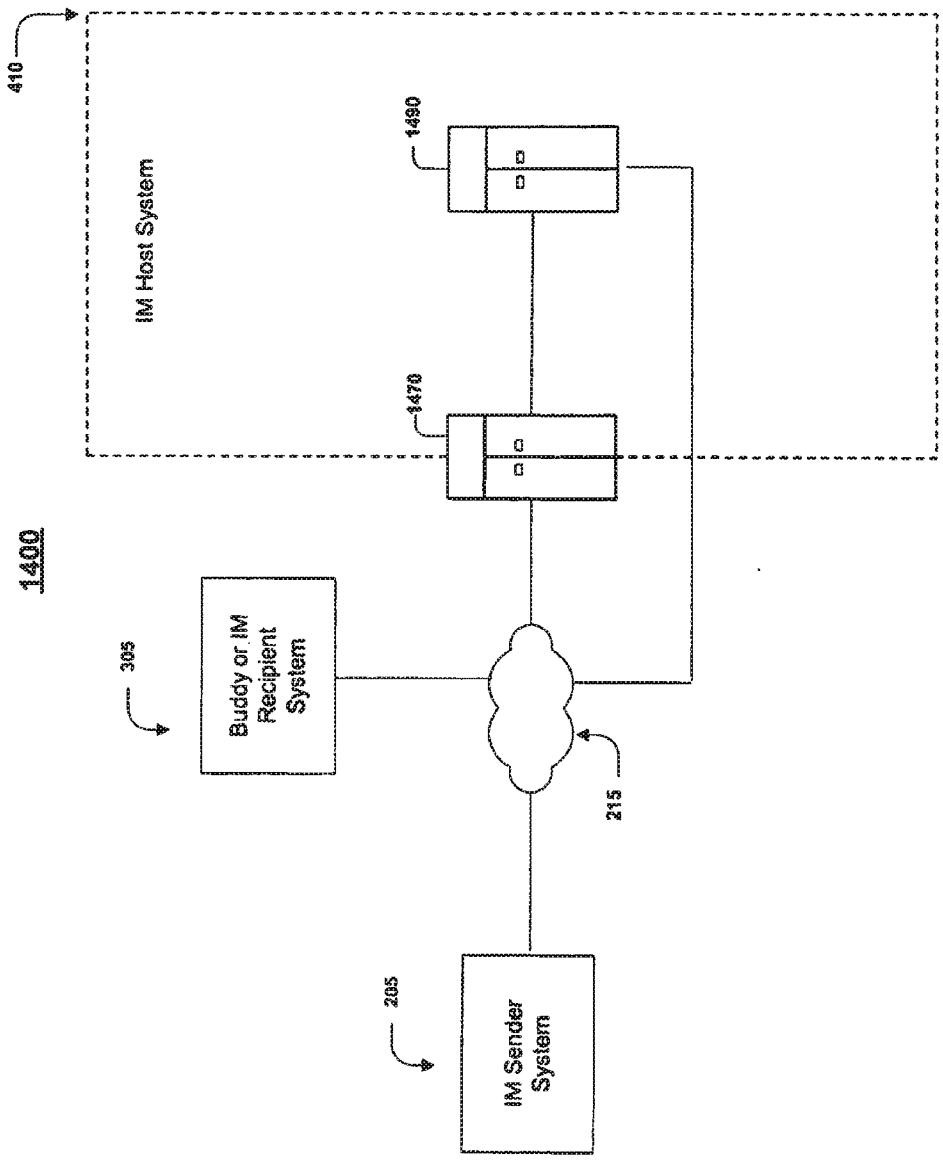
1400
410
IM Host System
1490
1470
305
Buddy or IM Recipient System
215
205
IM Sender System

Fig. 14

MULTIPLE PERSONALITIES

CROSS-REFERENCE TO RELATED APPLICATIONS

[0001] This application is a continuation of U.S. application Ser. No. 13/317,023, filed Oct. 7, 2011 (issuing on Dec. 15, 2015 as U.S. Pat. No. 9,215,095), which is a continuation-in-part of U.S. application Ser. No. 10/847,463, filed May 18, 2004 (now U.S. Pat. No. 8,037,150), which is a continuation-in-part of U.S. application Ser. No. 10/715,209, filed Nov. 18, 2003 (now U.S. Pat. No. 7,636,751), which claims priority to U.S. Provisional Application No. 60/427,941, filed Nov. 21, 2002, and U.S. Provisional Application No. 60/488,399, filed Jul. 21, 2003, all of which applications are incorporated herein by reference in its entirety. To the extent appropriate, a claim of priority is made to each of the above-recited applications.

TECHNICAL FIELD

[0002] This description relates to projecting multiple personalities in communications for a communications application operator (hereinafter "sender") and/or changing features and functionality based on the selected personality.

BACKGROUND

[0003] Online service providers facilitate access to information and services by providing interactive User Interfaces (UIs) that help users navigate to desired resources. For example, in the case of a system that enables the exchange of instant messages (IMs), a UI allows an IM sender to invoke actions, such as establishing a communications link, through the selection of screen objects such as icons, windows, and drop-down menus. The design of a UI has a significant impact on an IM sender's online experience. In particular, the icons, the windows, and the menus of a UI may be arranged to enable an IM sender to locate information and services quickly and easily.

[0004] An IM sender may send self-expression items to an IM recipient. Current implementations of self-expression in instant messaging enable a user to individually select self-expression settings, such as a Buddy Icon and Buddy Wallpaper, which settings thereafter project to everyone who sees or interacts with that person online.

SUMMARY

[0005] A user may name and save multiple different "personas" or "personalities," which are groups of instant messaging self-expression settings such as, for example, Buddy Icons, Buddy Sounds, Buddy Wallpaper and Emoticons (e.g., Smileys). Then, depending on the identity with whom the user communicates, they may quickly access and adopt one of their personalities in at least an instant messaging environment, and may manage the online appearance they present to others. Functionality and features of the instant messaging interface may differ based upon the personality being used in the IM conversation.

[0006] In one general aspect, a user interface on a display enables perception of communications that leverage an instant messaging platform. The user interface includes a module for identifying at least two identities within an instant messaging communications environment to whom messages may be directed, a module for associating a first persona of a user with a first functionality, a module for associating a second persona of the user with a second functionality, the second functionality differing from the first functionality, a module for rendering an instant messaging application user interface for a first instant messaging communications session involving the user and a first identity and a second instant messaging communications session involving the user and a second identity, the user interface being presented at a system display presented to the user, and a module for enabling the first person of the user to be projected to the first identity while concurrently enabling a second persona of the same user to be projected to the second identity.

[0007] Implementations may include one or more of the following features. For example, the first functionality may include encrypting messages sent by the user during the first instant messaging communications session and the second functionality may include not encrypting messages sent by the user during the second instant messaging communications session. In another example, the first functionality may include decrypting messages received by the user during the first instant messaging communications session and the second functionality may include not decrypting messages received by the user during the second instant messaging communications session. In another example, the first functionality may include logging messages sent and received by the user during the first instant messaging communications session and the second functionality may include not logging messages sent and received by the user during the second instant messaging communications session. The first functionality also may include providing a notification concerning the message logging by the user to the first of the identities and the second functionality may include not providing a notification concerning the message logging by the user to the second of the identities.

[0008] In another example, the first functionality may include determining the routing of a message received by the user during the first instant messaging communications session. Determining the routing of the message may include determining the routing of the message over a communications mode other than the communications mode over which the message was received. The message may be routed using the determined routing. Routing the message may include forwarding the message to a different user. The message may be forwarded, for example, via e-mail. In a further example, the first functionality includes providing a notification concerning the message routing to the first of the identities. The routing may be determined based upon an online presence state of the user. The second functionality may include not determining a routing of a message received by the user during the second instant messaging communications session.

[0009] In another implementation, the first persona and the second persona each include at least one shared functionality. For example, the shared functionality may include logging messages sent and received by the user during the first and the second instant messaging communications sessions. In another example, the first functionality may include encrypting messages sent by the user during the first instant messaging communications session and the second functionality may include not encrypting messages sent by the user during the second instant messaging communications session. In another example, the shared functionality may include encrypting messages sent by the user during the first and the second instant messaging communications sessions, the first functionality may include logging messages sent and

received by the user during the first instant messaging communications session and the second functionality may include not logging messages sent and received by the user during the second instant messaging communications session.

[0010] The user interface also may include a module for associating the first persona with a first group of identities such that the first persona is projected to members of the first group of identities in a communications session, where the first of the identities is included within the first group of identities. The user interface also may include a module for associating the second persona with a second group of identities such that the second persona is projected to members of the second group of identities in a communications session, where the second of the identities is included within the second group of identities.

[0011] The user interface also may include a module for associating an individual persona with the first of the identities, associating a group persona with a group of the identities with which the first of the identities is associated, and associating a global persona with each of the identities, where the first persona projected to the first of the identities comprises an amalgamation of the individual persona associated with the first of the identities, the group persona associated with the group of the identities, and the global persona associated with each of the identities. In one example, the individual persona associated with the first of the identities overrides the group persona associated with the group of the identities and the group persona associated with the group of the identities overrides the global persona associated with each of the identities, to the extent a conflict exists.

[0012] The communications session may be an instant messaging communications session. The identities may be members of a buddy list, including the online presence state of the identities.

[0013] In one implementation, the user interface may include a module for projecting the functionality of the first persona of the user to the first of the identities while concurrently projecting the functionality of the second persona of the same user to the second of the identities. The user interface also may include a module for selecting among the first and second personas for projection to a particular one of the identities based on an attribute of the particular identity.

[0014] The user interface also may include a module for receiving from the user a selection of at least the first and second personas. The user interface also may include a module for selecting functionality of the first persona based upon an attribute of the first identity.

[0015] The user interface also may include a module for configuring the functionality of the first persona assigned to the first identity to change based upon the occurrence of a predetermined event. The predetermined event may be based, for example, upon a time of day, a day of the week, or the passage of a pre-determined interval of time. The predetermined event may be, for example, a weather condition at a predetermined geographic location, the communication of a predetermined word, the communication of a predetermined emoticon, a predetermined date, or the communication of a predetermined number of instant messages from the first identity.

[0016] In another general aspect, a computer implemented method for enabling perception of multiple online personas in an instant messaging communications session includes identifying at least two identities within a communications environment to whom messages may be directed, associating a first persona of a user with a first functionality, associating a second persona of the same user with a second functionality, the second functionality differing from the first functionality, and enabling the first persona of the user to be projected to a first of the identities while concurrently enabling the second persona of the same user to be projected to a second of the identities.

[0017] Implementations may include one or more of the following features. For example, the first functionality may include encrypting messages sent by the user during an instant messaging communication session with the first of the identities and the second functionality may include not encrypting messages sent by the user dining an instant messaging communication session with the second of the identities. In another example, the first functionality includes decrypting messages received by the user during an instant messaging communication session with the first of the identities and the second functionality includes not decrypting messages received by the user during an instant messaging communication session with the second of the identities. In another example, the first functionality includes logging messages sent and received by the user during an instant messaging communication session with the first of the identities and the second functionality comprises not logging messages sent and received by the user during an instant messaging communication session with the second of the identities. The first functionality may include providing a notification concerning the message logging by the user to the first of the identities and the second functionality may include not providing a notification concerning the message logging by the user to the second of the identities.

[0018] In another example, the first functionality includes determining a routing of a message received by the user during an instant messaging communications with the first of the identities. Determining the routing may include determining a routing of the message over a communications mode other than the communications mode over which the message was received. The message may be routed using the determined routing. Routing the message may include forwarding the message to a different user, for example, via e-mail. The first functionality also may include providing a notification concerning the message routing to the first of the identities. Determining the routing may include determining the routing based upon an online presence state of the user. The second functionality may include not determining a routing of a message received by the user during an instant messaging communications with the second of the identities.

[0019] In another implementation, the first persona and the second persona each include to at least one shared functionality. The shared functionality may include logging messages sent and received by the user during an instant messaging communication session with the first of the identities and the second of the identities, the first functionality may include encrypting messages sent by the user during an instant messaging communication session with the first of the identities and the second functionality may include not encrypting messages sent by the user during an instant messaging communication session with the second of the identities. The shared functionality also may include encrypting messages sent by the user during an instant messaging communication session with the first of the identities and the second of the identities, the first functionality may include logging messages sent and received by the user during an instant messaging communi-

cation session with the first of the identities, and the second functionality may include not logging messages sent and received by the user during an instant messaging communication session with the second of the identities.

[0020] In another implementation, the first persona is associated with a first group of identities such that the first persona is projected to members of the first group of identities in a communications session, where the first of the identities is included within the first group of identities. The second persona may be associated with a second group of identities such that the second persona is projected to members of the second group of identities in a communications session, where the second of the identities is included within the second group of identities.

[0021] In another implementation, an individual persona is associated with the first of the identities, a group persona is associated with a group of the identities with which the first of the identities is associated, and a global persona is associated with each of the identities, where the first persona projected to the first of the identities includes an amalgamation of the individual persona associated with the first of the identities, the group persona associated with the group of the identities, and the global persona associated with each of the identities. The individual persona associated with the first of the identities may override the group persona associated with the group of the identities and the group persona associated with the group of the identities may override the global persona associated with each of the identities, to the extent a conflict exists.

[0022] In one implementation, the communications session includes an instant messaging communications session, and the identities are members of a buddy list. The buddy list may include the online presence state of the identities.

[0023] In another implementation, the functionality of the first persona of the user is projected to the first of the identities while concurrently projecting the functionality of the second persona of the same user to the second of the identities. A selection may be made among the first and second personas for projection to a particular one of the identities based on an attribute of the particular identity. A selection of at least the first and second personas may be received from the user. The functionality of the first persona may be selected based upon an attribute of the first identity.

[0024] In another implementation, the functionality of the first persona assigned to the first identity may be configured to change based upon the occurrence of a predetermined event. The predetermined event may be based, for example, upon a time of day, a day of the week, or the passage of a predetermined interval of time. The predetermined event may be, for example, a weather condition at a predetermined geographic location, communication of a predetermined word, communication of a predetermined emoticon, a predetermined date, or communication of a predetermined number of instant messages from the first identity.

[0025] Aspects of multiple personalities may be implemented by an apparatus and/or by a computer program stored on a computer readable medium. The computer readable medium may comprise a disc, a client device, a host device, and/or a propagated signal. In addition, aspects of the multiple personalities may be implemented in a client/host context or in a standalone or offline client device. The multiple personalities may be rendered in a client/host context and may be accessed or updated through a remote device in a client/host environment. The multiple personalities also may be rendered by the standalone/offline device and may be accessed or updated through a remote device in a non-client/host environment such as, for example, a LAN server serving an end user or a mainframe serving a terminal device.

[0026] Other features will be apparent from the following description, including the drawings, and from the claims.

DESCRIPTION OF DRAWINGS

[0027] FIG. **1** is an illustration of a graphical user interface.

[0028] FIG. **2** illustrates a communications system capable of delivering and exchanging data between an IM sender system and a host system through a communications link.

[0029] FIG. **3** illustrates a communications system including an IM sender system communicating with a host system through a communications link.

[0030] FIG. **4** illustrates a communications system including an IM sender system communicating with an IM recipient system and an IM host system through a communication link.

[0031] FIG. **5** shows an exemplary procedure to enable an IM sender to select an online persona to be made perceivable to an IM recipient.

[0032] FIG. **6** is an exemplary procedure to enable an IM sender to change a personality assigned to an IM recipient

[0033] FIG. **7** shows an IM user interface.

[0034] FIG. **8** shows an IM user interface with personalization items.

[0035] FIG. **9** illustrates a desktop with an exemplary buddy list interface.

[0036] FIG. **10** shows a chooser user interface that enables the IM sender to select among available personalities.

[0037] FIG. **11** shows a user interface for font and color adjustments that an IM sender may employ in creating a personality.

[0038] FIG. **12** shows a series of exemplary user interfaces for enabling an IM sender to create and store a personality, and/or select various aspects of the personality such as buddy icons, buddy wallpaper, buddy sounds, and smileys.

[0039] FIG. **12**A illustrates an example of a user interface referred to in FIG. **12** for enabling an IM sender to create and store a personality, and/or select various aspects of the personality such as buddy icons, buddy wallpaper, buddy sounds, and smileys.

[0040] FIG. **12**B illustrates another example of a user interface referred to in FIG. **12** enabling an IM sender to create and store a personality, and/or select various aspects of the personality such as buddy icons, buddy wallpaper, buddy sounds, and smileys.

[0041] FIG. **12**C illustrates another example of a user interface referred to in FIG. **12** for enabling an IM sender to create and store a personality, and/or select various aspects of the personality such as buddy icons, buddy wallpaper, buddy sounds, and smileys.

[0042] FIG. **13**A illustrates a user interface to enable an IM sender to assign a persona to be projected and to select rules for resolving conflicts among the personas to be projected.

[0043] FIG. **13**B illustrates a user interface to enable an IM sender to assign a persona to be projected and to select rules for resolving conflicts among the personas to be projected.

[0044] FIG. **14** illustrates a communications system, including an IM sender system communicating with an IM recipient system and an IM host system through a communication link.

[0045] For brevity, several elements in the figures described below are represented as monolithic entities. However, as would be understood by one skilled in the art, these elements

each may include numerous interconnected computers and components designed to perform a set of specified operations and/or may be dedicated to a particular geographic region.

DETAILED DESCRIPTION

[0046] It is possible, through the systems and techniques described herein, to enable users to assemble one or more self-expression items into a collective "persona" or "personality," which may then be saved and optionally associated with one or more customized names or groups of names. Self-expression items are used to represent the IM sender or a characteristic or preference of the IM sender, and may include user-selectable binary objects. The self-expression items may be made perceivable by a potential IM recipient ("IM recipient") before, during, or after the initiation of communications by a potential IM sender ("IM sender"). For example, self-expression items may include images, such as wallpaper, that are rendered in a location having a contextual placement on a user interface. The contextual placement typically indicates an association with the user represented by the self-expression item. For instance, the wallpaper may be rendered in an area where messages from the IM sender are displayed, or as a chrome (i.e., border) around a dialog area on a user interface. Self-expression items also include icons such as buddy icons and mini-buddy icons, sounds, animation, video clips, and emoticons (e.g., smileys).

[0047] The personality may also include a set of features or functionality associated with the personality. For example, features such as encrypted transmission, IM conversation logging, and forwarding of instant messages to an alternative communication system may be enabled for a given personality. The features or functionality for one person may differ relative to another.

[0048] Users may assign personalities to be projected when conversing with other users, either in advance of or "on-the-fly" during a communication session. This allows the user to project different personalities to different people on-line. In particular, users may save one or more personalities (e.g., where each personality typically includes groups of instant messaging self-expression items such as, for example Buddy Icons, Buddy Sounds, Buddy Wallpaper, and Smileys, and/or a set of features and functionalities) and they may name those personalities to enable their invocation, they may associate each of different personalities with different users with whom they communicate or groups of such users so as to automatically display an appropriate/selected personality during communications with such other users or groups, or they may establish each of different personalities during this process of creating, adding or customizing lists or groups of users or the individual users themselves. Thus, the personalities may be projected to others in interactive online environments (e.g., Instant Messaging and Chat) according the assignments made by the user. Moreover, personalities may be assigned, established and/or associated with other settings, such that a particular personality may be projected based on time-of-day, geographic or virtual location, or even characteristics or attributes of each (e.g., cold personality for winter in Colorado or chatting personality while participating in a chat room).

[0049] When different functions are associated with each of several different personas, selection and projection of a persona to different buddies will invoke different functions with respect to the communications involving these buddies. For example, if a work persona with encrypted IM functionality is associated with the screen name of a co-worker and a home personality without encrypted IM functionality is associated with the screen name of a neighbor, then communications involving the co-worker will invoke encrypted IM functionality and communications involving the neighbor will not.

[0050] Moreover, it is possible for the user to maintain and project a consistent perceivable persona while invoking different functionality with respect to communications between different buddies. For example, aspects of a persona other than functionality may be chosen by the user to be the same. Thus, a user may assign encrypted IM functionality to the screen name of a co-worker and not assign encrypted IM functionality to the screen name of a neighbor. The user will present a consistent perceivable persona to both the co-worker and the neighbor, however different functionality will be associated with the communications with the co-worker and the neighbor. In particular, communications involving the co-worker will invoke encrypted IM functionality and communications involving the neighbor will not.

[0051] FIG. **1** illustrates an exemplary graphical user interface **100** viewed by a user (IM sender) whose instant messaging communication program is configured to project different personalities to two or more other users or user groups (IM recipients). In particular, the user is projecting two different personalities in two concurrent IM conversations with two different IM recipients, ChattingChuck **115***a* and GabbyGrace**00** **115***b*. The instant messaging communications sessions may be conducted simultaneously, near-simultaneously, or serially. A user interface (UI) **105** is rendered on the display **100** and includes an instant messaging (IM) buddy list **110**, a first IM UI **120**, and a second IM UI **150**.

[0052] The IM buddy list **110** includes an IM sender-selected list **115** of potential instant messaging recipients ("buddies"). Buddies typically are contacts who are known to the potential instant message sender. The IM buddy list **110** may indicate to the IM sender whether or not one or more of the IM recipients on the buddy list are present, for instance, that they are or are not online and available for instant messaging communications. Buddies may be grouped by an IM sender into a user-defined or a pre-selected grouping ("groups"). As shown, the IM buddy list **110** has three categories of groups, Buddies **111**, Co-Workers **112**, and Family **113**. At least two potential instant messaging recipients **115***a*, **115***b* are online. GabbyGrace**00** **115***b* belongs to the Buddies group **111**, and ChattingChuck **115***a* belongs to the Co-Workers group **112**.

[0053] The first IM UI **120** is rendered to the IM sender for an IM communications session with a first IM recipient, in this case ChattingChuck **115***a*. The first IM UI **120** includes self-expression items chosen by the IM sender to be projected to the first IM recipient **115***a*, such as a first buddy icon **137** and first IM wallpaper **138**. The online persona defined for any particular IM, such as IM recipient **115***a*, includes the collection of self-expression items and/or features and functionalities. For example, the online persona may include one or more features giving a certain functionality for the IM communications session, such as automatic logging of IM conversations, encryption of IM messages, and forwarding of IM messages to another user such as an administrative assistant.

[0054] The first IM UI **120** includes an IM display and compose area **129** for composing IM messages to be sent to the first IM recipient **115***a* and for displaying a transcript of

the IM communication session with the first IM recipient **115***a*. The IM display and compose area **129** also may display wallpaper that is consistent with or independent of wallpaper **138**, the wallpaper within IM display and compose area **129** being selectable by the IM sender as part of the first persona.

[0055] The first IM UT **120** also includes a set of feature controls **130** and a set of transmission controls **145**. The feature controls **130** may control features such as encryption, conversation logging, conversation forwarding to a different communications mode, font size and color control, and spell checking, among others. The set of transmission controls **145** includes a control **146** to send the message that was typed into the IM display and compose section **129**, and a control **148** to check whether the potential IM recipient is available for IM communications.

[0056] Font and appearance controls may be provided in the feature controls **130** of IM UT **120** and configured as part of a particular persona to control how the message being entered in the TM display and compose area **129** is displayed in the IM display and compose area **129** as a transmitted message once the composed message in the IM display and compose area **129** is sent. The appearance of sent messages in the display may differ from the appearance of messages being composed in the display, but not yet sent. The display of first self-expression items **137**, **138** in the first IM UT **120** enables the IM sender to conveniently perceive the online persona being projected to the particular IM recipient with whom the IM sender is presently communicating, which in this case is the first IM recipient, ChattingChuck **115***a*.

[0057] The second IM UT **150** is rendered to the IM sender for an IM communications session with a second IM recipient, which in this case is GabbyGrace**00** **115***b*, and has characteristics similar to those described above with respect to the first IM UT **120**. However, the online persona projected by the IM sender to the second IM recipient **115***b* may differ from the online persona projected by the IM sender to the first IM recipient **115***a*, and similarly, the features and functions employed automatically with respect to the online persona for the second IM recipient **115***b* may be configured to differ from those employed automatically with respect to the first IM recipient **115***a*. For example, the persona projected to ChattingChuck **115***a* (the first persona) may be based on an association between the first persona and the group to which ChattingChuck **115***a* belongs, which in this case is the Co-Workers group **112**. Or, as one alternative, the persona projected to ChattingChuck **115***a* may be based on an association between the persona and the individual IM recipient, i.e., ChattingChuck **115***a*. Similarly, the persona projected to GabbyGrace**00** **115***b* (the second persona) may be based on an association between the second persona and the group to which GabbyGrace**00** **115***b* belongs, which in this case is the Buddies group **111**. Or, as one alternative, the persona projected to GabbyGrace**00** **115***b* may be based on an association between the persona and the individual IM recipient, i.e., GabbyGrace**00** **115***b*.

[0058] The second IM UI **150** includes self-expression items chosen by the IM sender to be projected to the second IM recipient **115***b*, such as a second buddy icon **167** and second IM wallpaper **168**. The online persona defined for any particular IM recipient, such as IM recipient **115***b*, typically includes the collection of self-expression items, and may differ from the online persona projected to the first IM recipient **115***a* in the first IM UI **120**. The online persona also may include features and functionality for the IM communications session with the second IM recipient **115***b*, such as automatic logging of IM conversations, encryption of IM messages, and forwarding of IM messages to another user such as an administrative assistant. The second IM UI **150** also includes an IM display and compose area **159** for composing IM messages to be sent to the second IM recipient **115***b* and for displaying a transcript of the IM communication session. The IM display and compose area **159** also may display wallpaper that is consistent with or independent of wallpaper **168**, the wallpaper within IM display and compose area **159** being selected by the IM sender as part of the second persona.

[0059] The second IM UI **150** includes a set of feature controls **160**, and a set of transmission controls **175**. The feature controls **160** and transmission controls **175** have similar functionality to that described above with respect to the feature controls **130** and transmission controls **145** of the first IM UI **120**. Font and appearance controls may be provided in the feature controls **160** of IM UI **150** and configured as part of a particular persona to control how the message being entered in the IM display and compose area **159** is displayed before and after the message in the IM display and compose area **159** is sent. The display of second self-expression items **167**, **168** in the second IM UI **150** enables the IM sender to easily keep track of the online persona being projected to the particular IM recipient with whom the IM sender is communicating, which in this case is the second IM recipient, GabbyGrace**00** **115***b*.

[0060] An IM sender may create an online persona or personality from an IM sender-selected group or a pre-selected group of self-expression items and/or features and functionality. For example, an IM sender may separately choose a Buddy Icon, Sound, Wallpaper and Smiley and save the set of self-expression items as a personality with a given name, such as "Work," "Social," and "Rainy Day." The IM sender may also select certain features and functionalities to be saved under the personality. For instance, the IM sender may choose to create and save for later invocation a "Social" personality by combining a Buddy Icon of a butterfly, a Buddy Sound of laughter, a Buddy Wallpaper of musical notes, and a Smiley set of beer mugs. The IM sender may also choose not to adopt any special features or functionality for this personality. The IM sender may configure their communications system to invoke their "Social" personality for only a subset of IM recipients and that personality perhaps being defined with less than all personalization items being specified such that aspects of the Social personality are amalgamated with aspects of one or more other personalities invoked during a communication sessions with a particular IM recipient. The IM sender also may configure their communications system to invoke their "Social" personality a upon the occurrence of predetermined event at the IM sender site such as, for example, a day of the week, a holiday, or a time of day. By way of illustration, if a persona invoked for an IM recipient includes a buddy icon and a buddy sound, that persona may be modified on a Friday evening through substitution of the Social personality Buddy Sound only, maintaining the buddy icon. User-specified rules can be used as a basis for determining whether/how to amalgamate situational personalities (e.g., the Social personality) with user-based personalities.

[0061] As a second example, the IM sender may create a "Work" personality by combining a Buddy Icon of a beaver, a Buddy Sound of a clock ticking, a Buddy Wallpaper of power tools, and a Smiley set of clock faces. This Work personality may also include features and functionality such

that messages sent during invocation of the Work personality are encrypted and conversations are logged/recorded, automatically or by default.

[0062] The personalities created or adopted by the IM sender may have completely different self-expression settings, or may have some overlap in self-expression settings. The personalities also may have completely different features and functionality, or may have some overlap. In the exemplary personalities described above, for example, the IM sender could change the Buddy Wallpaper so that both the "Social" and the "Work" personalities have a Buddy Wallpaper of musical notes and both send encrypted messages. In another implementation, the IM sender could choose a preselected set of self-expression items, which may be related by a theme. For example, the theme may relate to a favorite football team and may include a buddy icon of the team mascot, buddy wallpaper of the team colors, and a buddy sound of an excerpt of the team fight song or appropriate sound from the team mascot. In one implementation, the themed persona could be purchased or leased by the IM sender.

[0063] As a third example, the IM sender may also select certain features and functionalities to be saved under a personality and triggered upon the occurrence of an event. For instance, the IM sender may choose to create and save for later invocation a "Rainy Day" personality by combining a Buddy Icon of an umbrella, a Buddy Sound of rain falling, a Buddy Wallpaper of clouds, and a Smiley set of raindrops. The IM sender may also choose not to adopt any special features or functionality for this personality. The IM sender may configure their communications system to invoke their "Rainy Day" personality when the environmental condition experienced at the IM sender site include rain, the Rainy Day personality perhaps being invoked for only a subset of IM recipients and that personality perhaps being defined with less than all personalization items being specified such that aspects of the Rainy Day personality are amalgamated with aspects of one or more other personalities invoked during a communication sessions with a particular IM recipient. By way of illustration, if a persona invoked for an IM recipient includes a buddy icon and a buddy sound, that persona may be modified on a Rainy Day through substitution of the Rainy Day personality Buddy Sound only, maintaining the buddy icon. User-specified rules can be used as a basis for determining whether/how to amalgamate situational personalities (e.g., the Rainy Day personality) with user-based personalities.

[0064] For example, the user may invoke settings so that the Rainy Day personality is be globally applied to all other personalities based on triggers unrelated to invocation by the user of a communication session with a particular user, or it may be associated with only a subset of users if desired.

[0065] An IM sender may create multiple different personalities, one or more of which may be assigned to one or different of particular IM recipients, or groups of several IM recipients defined by the user (e.g., within the Buddy List) or otherwise. For example, the IM sender may assign her "Social" personality to one or more of her family members, who may be, for example, in a "family" group **117** of buddies but may assign her more professional and upbeat "Work" Personality to a group identified as "co-workers" in her content or Buddy list to enable future application of the Work personality to each of the constituent office colleagues forming the co-worker group **119**. The particular IM recipient or recipients will see the specific personality that the IM sender has assigned them whenever they converse with the IM sender online.

[0066] As an example, if the first IM recipient **115***a* has been assigned the "Social" personality, then the first IM UI **120** would display a first buddy icon **137** of a butterfly, first buddy wallpaper **138** of musical notes, and a buddy sound of laughter. By contrast, if the second IM recipient **115***b* has been assigned the "Work" personality, then the second IM UI **150** would display a second buddy icon **167** of a beaver, second buddy wallpaper **168** of power tools, and a buddy sound of clocks ticking.

[0067] Also, an IM sender may quickly assign personalities to a specific IM recipient or group of recipients or change or modify personalities with respect to a specific IM recipient or group of recipients during an instant messaging conversation. For example, the IM sender may use a chooser that is embedded in the conversation window. An IM sender also may change personalities within a chooser interface.

[0068] This approach provides an IM sender with the ability to, among other things, save groups of expressions and/or features and functionality with custom names, assign a personality to specific IM recipients or groups of IM recipients, and access and assign the personalities quickly, for example, an interface such as the instant messaging conversation window or the chooser interface.

[0069] Personalities may be assigned on a global basis, a group basis, and/or an individual (personal) basis. Also, the self-expression items may be assigned to personalities on a per-individual basis, a per-group basis or a global basis. In one implementation, self-expression items and/or features and functionality may be assigned on a "global" basis to all individuals, a "group" basis for individuals belonging to a particular group (e.g. friends, family, or co-workers), or an "individual" basis for a single individual IM recipient.

[0070] The persona may be changed by the IM sender before, during, or after an IM communication session with an IM recipient. In one implementation, the persona may change, or the user may be prompted to change, the persona after a pre-determined period of time or upon other conditions, such as a day of the week, a time of day, a holiday, a calendar event such as a birthday or wedding, a weekday, or a weekend day. In another implementation the persona, could change upon the occurrence of an event, such as a holiday or upon detecting certain language or emoticons in the IM conversation. In yet another implementation, the persona could change randomly.

[0071] Typically, IM communications involve an instantaneous or nearly instantaneous communication between two users, where each user is able to transmit, receive and display communicated information. Additionally, IM communications generally involve the display and perception of online presence information regarding other selected IM recipients. IM communications may be machine-to-machine communications that occur without intervention by or communication through an instant messaging server after a communication session is established or authentication is performed.

[0072] For illustrative purposes, FIGS. **2**, **3** and **4** show an example of a communications system for implementing techniques for transferring electronic data.

[0073] Referring to FIG. **2**, a communications system **200** is capable of delivering and exchanging data between an IM sender system **205** and a host system **210** through a communications link **215**. The IM sender system **205** typically

includes one or more client devices **220** and/or client controllers **225**, and the host system **210** typically includes one or more host devices **235** and/or host controllers **240**. For example, the IM sender system **205** or the host system **210** may include one or more general-purpose computers (e.g., personal computers), one or more special-purpose computers (e.g., devices specifically programmed to communicate with each other and/or the IM sender system **205** or the host system **210**), or a combination of one or more general-purpose computers and one or more special-purpose computers. The IM sender system **205** and the host system **210** may be arranged to operate within or in concert with one or more other systems, such as, for example, one or more LANs ("Local Area Networks") and/or one or more WANs ("Wide Area Networks").

[0074] The client device **220** and the host device **235** are generally capable of executing instructions under the command of, respectively, a client controller **225** and a host controller **240**. The client device **220** and the host device **235** are connected to, respectively, the client controller **225** and the host controller **240** by, respectively, wired or wireless data pathways **230** and **245**, which are capable of delivering data.

[0075] The client device **220**, the client controller **225**, the host device **235**, and the host controller **240** typically each include one or more hardware components and/or software components. An example of a client device **220** or a host device **235** is a general-purpose computer (e.g., a personal computer) or software on such a computer capable of responding to and executing instructions in a defined manner. Other examples include a special-purpose computer, a workstation, a server, a device, a component, other physical or virtual equipment or some combination of these capable of responding to and executing instructions. The client device **220** and the host device **235** may include devices that are capable of establishing peer-to-peer communications.

[0076] An example of client controller **225** or host controller **240** is a software application loaded on the client device **220** or the host device **235** for commanding and directing communications enabled by the client device **220** or the host device **235**. Other examples include a program, a piece of code, an instruction, a device, a computer, a computer system, or a combination of these for independently or collectively instructing the client device **220** or the host device **235** to interact and operate as described. The client controller **225** and the host controller **240** may be embodied permanently or temporarily in any type of machine, component, physical or virtual equipment, storage medium, or propagated signal capable of providing instructions to the client device **220** and the host device **235**.

[0077] The communications link **215** typically includes a delivery network **260** that provides direct or indirect communication between the IM sender system **205** and the host system **210**, irrespective of physical separation. Examples of a delivery network **260** include the Internet, the World Wide Web, WANs, LANs, analog or digital wired and wireless telephone networks (e.g., Public Switched Telephone Network (PSTN), Integrated Services Digital Network (ISDN), and Digital Subscriber Line (xDSL)), radio, television, cable, or satellite systems, and other delivery mechanisms for carrying data. The communications link **215** may include communication pathways **250** and **255** that enable communications through the one or more delivery networks **260** described above. Each of the communication pathways **250** and **255** may include, for example, a wired, wireless, cable or satellite communication pathway.

[0078] FIG. **3** illustrates a communications system **300** including an IM sender system **205** communicating with a host system **210** through a communications link **215**.

[0079] The IM sender system **205** includes a client device **220** that typically includes a general-purpose computer **370** having an internal or external memory **372** for storing data and programs such as an operating system **374** (e.g., DOS, Windows™, Windows 95™, Windows 98™, Windows 2000™, Windows Mc™, Windows XP™, Windows NT™, OS/2, or Linux) and one or more application programs. Examples of application programs include authoring applications **376** (e.g., word processing programs, database programs, spreadsheet programs, or graphics programs) capable of generating documents or other electronic content; client applications **378** (e.g., America Online (AOL) client, CompuServe client, AOL Instant Messenger (AIM) client, interactive television (ITV) client, Internet Service Provider (ISP) client, or instant messaging (IM) client) capable of communicating with other computer users, accessing various computer resources, and viewing, creating, or otherwise manipulating electronic content; and browser applications **380** (e.g., Netscape's Navigator or Microsoft's Internet Explorer) capable of rendering standard Internet content and other content formatted according to standard protocols such as the Hypertext Transfer Protocol (HTTP).

[0080] One or more of the application programs may be installed on the internal or external storage **372** of the general-purpose computer **370**. Alternatively, in another implementation, the client controller **225** may access application programs externally stored in and/or performed by one or more device(s) external to the general-purpose computer **370**.

[0081] The general-purpose computer **370** also includes a central processing unit **382** (CPU) for executing instructions in response to commands from the client controller **225**, and a communication device **384** for sending and receiving data. One example of the communication device **384** is a modem. Other examples include a transceiver, a set-top box, a communication card, a satellite dish, an antenna, a network adapter, or some other mechanism capable of transmitting and receiving data over the communications link **215** through a wired or wireless data pathway **250**. The general-purpose computer **370** optionally includes a television ("TV") tuner **386** for receiving television programming in the form of broadcast, satellite, and/or cable TV signals. The TV tuner **386** permits the client device **220** to selectively and/or simultaneously display network content received by communications device **384** and TV programming content received by the TV tuner **386**.

[0082] The general-purpose computer **370** may include an input/output interface **388** that enables wired or wireless connection to various peripheral devices **390**. Examples of peripheral devices **390** include, but are not limited to, a mouse **391**, a mobile phone **392**, a personal digital assistant (PDA) **393**, an MP3 player (not shown), a keyboard **394**, a display monitor **395** with or without a touch screen input, a TV remote control **396** for receiving information from and rendering information to users, and an audiovisual input device **398**.

[0083] Although FIG. **3** illustrates devices such as a mobile telephone **392**, a PDA **393**, and a TV remote control **396** as being peripheral with respect to the general-purpose computer **370**, in another implementation, such devices may

themselves include the functionality of the general-purpose computer **370** and operate as the client device **220**. For example, the mobile phone **392** or the PDA **393** may include computing and networking capabilities and function as a client device **220** by accessing the delivery network **260** and communicating with the host system **210**. Furthermore, the IM sender system **205** may include one, some or all of the components and devices described above.

[0084] FIG. **4** illustrates a communications system **400** including an IM sender system **205** communicating with an IM recipient system **405** and an IM host system **410** through a communication link **215**. Such a communications system may be used by users of IM service providers, such as, for example, AIM, ICQ, Yahoo Messenger, and Microsoft Messenger.

[0085] In one implementation, the IM host system **410** may have characteristics similar to those described above with respect to the host system **210**, the IM recipient system **405** may have characteristics similar to those described above with respect to the IM sender system **205**, and the IM sender system **205** and the IM recipient system **405** may include communication software to enable users of the client systems to access the IM host system **410**.

[0086] The IM host system **410** may support IM services irrespective of an IM sender's network or Internet access. Thus, the IM host system **410** may allow users to send and receive IMs, regardless of whether they have access to any particular ISP. The IM host system **410** also may support associated services, such as administrative matters, advertising, directory services, chat, and interest groups related to the IM. The IM host system **410** has an architecture that enables the devices (e.g., servers) within the IM host system **410** to communicate with each other. To transfer data, the IM host system **410** employs one or more standard or proprietary IM protocols.

[0087] To access the IM host system **410** to begin an IM session in the implementation of FIG. **4**, the IM sender system **205** establishes a connection to the IM host system **410**. Once a connection to the IM host system **410** has been established, the IM sender system **205** may directly or indirectly transmit data to and access content from the IM host system **410**. By accessing the IM host system, an IM sender can use the IM client application to view whether particular users are online, exchange IMs with particular IM recipients, participate in group chat rooms, trade files such as pictures, invitations or documents, find other IM recipients with similar interests, get customized information such as news and stock quotes, and search the Web. IM recipient system **405** may be similarly manipulated to establish contemporaneous connection with IM host system **410**.

[0088] Once connectivity is established, an IM sender who is using IM sender system **205** may view whether an IM recipient using IM recipient system **405** is online, and typically may view whether the IM recipient is able to receive IMs. If the IM recipient is online, the IM sender may exchange IMs with the IM recipient.

[0089] Furthermore, the IM sender may view or perceive certain aspects of a personality selected by a potential IM recipient prior to engaging in communications with that potential IM recipient. For example, certain aspects of an IM recipient selected personality, such as a buddy icon or a miniature buddy icon chosen by the IM recipient, may be perceivable through the buddy list itself prior to engaging in communications. Other aspects of a selected personality chosen by an IM recipient may be made perceivable upon opening of a communication window by the IM sender for a particular IM recipient but prior to initiation of communications.

[0090] In one implementation, the IMs sent between IM sender system **205** and IM recipient system **405** are routed through IM host system **410**. In another implementation, the IMs sent between IM sender system **205** and IM recipient system **405** are routed through a third party server (not shown), and, in some cases, are also routed through IM host system **410**. In yet another implementation, the IMs are sent directly between IM sender system **205** and IM recipient system **405**.

[0091] As shown in FIG. **4**, the IM host system may include a data store **415** for one or more personalities for one or more instant messaging senders. The IM host system may also include a data store **420** for available attributes of personalities. The attributes may include easily selectable items made available to a user while building a personality and as such, are not intended to represent all possible options. The personalities also may be stored locally in a data store **425** at the IM sender system **205**.

[0092] FIG. **5** shows an exemplary procedure **500** to enable an IM sender to select an online persona to be made perceivable to an IM recipient.

[0093] The procedure **500** may be implemented in a client/host context, or a standalone or offline client context. For example, while some functions of procedure **500** may be performed entirely by the IM sender system **205**, other functions may be performed by host system **210**, or the collective operation of the IM sender system **205** and the host system **210**. In procedure **500**, the online persona may be respectively selected and rendered by the standalone/offline device, and the online persona may be accessed or updated through a remote device in a non-client/host environment such as, for example, a LAN server serving an end user or a mainframe serving a terminal device. Thus, the procedure **500** described below may be implemented for an OSP, ISP, browser and/or other software program having a graphical user interface, such as programs for instant messaging, chat, electronic mail and stand-alone browsers. Moreover, procedure **500** may be implemented by hardware, software, devices, computers, computer systems, equipment, components, programs, applications, code, storage media, or propagated signals.

[0094] Procedure **500** generally involves selecting and projecting an online persona. The IM sender creates or modifies one or more online personalities (step **505**). As discussed above with respect to FIG. **1**, creating an online persona generally involves the IM sender selecting one or more self-expression items and/or features and functionalities to be displayed to a certain IM recipient or group of IM recipients.

[0095] FIG. **7** shows a basic IM user interface (UI) **700**A. IM UI **700** has an IM recipient portion **725** and an IM sender portion **735**. IM UI **700** also has a set of feature controls **730**. As shown, IM UI **700** does not have any self-expression items or any features or functionalities selected.

[0096] FIG. **8** shows an IM UI **800** with personalization items such as a buddy icon **837** chosen by the IM sender when having an IM conversation with a particular IM recipient, and a buddy icon **827** of the particular IM recipient with whom the IM sender is having an IM conversation. IM UI **800** has an IM recipient portion **825** and an IM sender portion **835**. The IM recipient portion **825** displays the buddy icon **827** and wallpaper **828** chosen by the IM recipient with whom the IM

sender is having a conversation. The IM recipient portion also contains an icon **826** that indicates that the IM sender is using a mobile device. Upon receipt of such an icon, changes in the personality of the IM sender may be automatically triggered or offered automatically to the IM sender. For example, the IM sender may be presented an option to project a buddy icon or wallpaper that presents better to lower resolution devices or to eliminate self-expressions related to graphics altogether to conserve bandwidth and storage, based on whether the mobile device is capable of rendering such self-expression items to the IM recipient. The IM sender may wish to change other self-expression items or features/functions when an indication is received that the IM recipient is using a mobile device or other devices less capable of handling particular self-expressions items. The IM sender portion **835** contains the buddy icon **837** and wallpaper **838** currently being made perceivable by the IM sender to the IM recipient with whom the IM sender is having an IM conversation.

[0097] FIG. **9** illustrates a desktop **900** with an exemplary buddy list interface **905** presented to a IM sender (e.g., "randomcontact") when an instant messaging client program is running on a client systems.

[0098] In FIG. **9**, a desktop **900** is shown with a buddy list user interface **905** of the instant messaging client program. User interface **905** has a box **910** that displays representations **915***a*-**915***h* of the IM sender's buddies. In the interface **905**, the representations **915***a*-**915***h* are icons showing the screen names of the IM recipients, however, other types or forms of representations may be used. The representations **915***a*-**915***h* may provide contextual information to the program IM sender about the buddy, such as whether the buddy is online, how long the buddy has been online, whether the buddy is away, or whether the buddy is using a mobile device.

[0099] The list of IM recipients displayed in box **910** of user interface **905** typically is referred to as the buddy list. In the buddy list, IM recipients are grouped together into buddy groups. The name or representation of each buddy group is displayed in the buddy list. When a buddy's IM client program is able to receive communications, the representation of the buddy in the buddy list is displayed under the name or representation of the buddy group to which the buddy belongs. For example, in the interface shown by FIG. **9**, the buddy whose screen name is "randomcontact**2**" is part of the Buddies buddy group and, consequently, the representation **915***a* for randomcontact**2** is listed under the representation **920***a* for the Buddies buddy group. Likewise, the buddy whose screen name is "Boss" is part of the Co-Workers buddy group and, consequently, the representation **915***c* for Boss is listed under the representation **920***b* for the Co-Workers buddy group. Similarly, the IM recipients whose screen names are "Mom," "Dad," and "Brother" are part of the Family buddy group **920***c* and, consequently, their representations **915***f*-**915***h* are listed under the representation **920***c* for the Family buddy group.

[0100] In creating personalities, the IM sender may forbid a certain personality to be shown to designated IM recipients and/or groups. For example, if the IM sender wants to ensure that the "Casual" personality is not accidentally displayed to the boss or to co-workers, the IM sender may prohibit the display of the "Casual" personality to the boss on an individual basis, and may prohibit the display of the "Casual" personality to the "Co-workers" group on a group basis. An appropriate user interface may be provided to assist the IM sender in making such a selection. Similarly, the IM sender may be provided an option to "lock" a personality to a IM recipient or a group of IM recipients to guard against accidental or unintended personality switching and/or augmenting. Thus, for example, the IM sender may choose to lock the "Work" personality to the boss on an individual basis, or to lock the "Work" personality to the "Co-workers" group on a group basis. In one example, the Casual personality will not be applied to a locked personality. A UI may be provided to assist the IM sender in making such a selection.

[0101] FIG. **10** shows a chooser UI **1000** that enables the IM sender to select among available personalities **1010**, **1015**, **1020**, **1025**, **1030**, **1035**, **1040**, **1045**, **1050**, **1055**, **1060**. The UI also has a control **1065** to enable the IM sender to "snag" the personality of a buddy, and a control **1070** to review the personality settings currently selected by the IM sender. Through the use of the chooser UI **1000**, the user may change the personality being projected to the IM recipient before, during, or after the IM conversation with the recipient.

[0102] FIG. **11** shows a UI **1100** for font and color adjustments **1105** that a IM sender may employ in creating a personality. Specifically, although shown in the context of an active conversation between an IM sender and an IM recipient, UI **1100** may be used to specify the font and color to be applied to text communicated under the guise of a particular personality, such as those shown at FIG. **10**, and to select different fonts/colors for different of several personalities. The UI **1100** may be invoked by user action such as, for example, right clicking on a mouse button or otherwise manipulating a user input device.

[0103] FIG. **12** shows a series **1200** of exemplary UIs **1205**, **1255**, **1280** for enabling a IM sender to create and store a personality, and/or select various aspects of the personality such as buddy icons, buddy wallpaper, buddy sounds, and smileys. As shown, UI **1205** enables an IM sender to select a set done or more self-expression items and save the set of self-expression items as a personality. The UI **1205** also enables an IM sender to review and make changes to an IM personality. For example, the UI **1205** enables an IM sender to choose a buddy icon **1210**, buddy wallpaper **1215**, emoticons **1220**, and buddy sounds **1225**. A set of controls **1240** is provided to enable the IM sender to preview **1240***a* the profile and to save **1240***b* these selected self-expression items as a personality. The IM sender is able to name and save the personality **1245** and then is able to apply the personality **1250** to one or more individual IM recipients or one or more groups of IM recipients. A management area **1250***a* is provided to enable the IM sender to delete, save, or rename various IM personalities. In choosing the self-expression items, other interfaces such as UI **1255** may be displayed to enable the IM sender to select the particular self-expression items. UI **1255** includes a set of themes **1260** for buddy icons which enables an IM sender to select a particular theme **1265** and choose an individual icon **1270** in the selected theme. A set of controls **1275** is provided to assist the IM sender in making the selection of self-expression items. Also, an IM sender may be enabled to choose a pre-determined theme, for example, by using a UI **1280**. In UI **1280**, the IM sender may select various categories **1285** of pre-selected themes and upon selecting a particular category **1290**, a set of default pre-selected, self-expression items is displayed, **1290***a*, **1290***b*, **1290***c*, **1290***d*, **1290***e*, and **1290***f*. The set may be unchangeable or the IM sender may be able to individually

change any of the pre-selected self-expression items in the set. A control section **1295** is also provided to enable the IM sender to select the themes.

[0104] In another implementation, the features or functionality of the IM interface may vary based upon user-selected or pre-selected options for the personality selected or currently in use. The features or functionality may be transparent to the IM sender. For example, when using the "Work" personality, the outgoing IM messages may be encrypted, and a copy may be recorded in a log, or a copy may be forwarded to a designated contact such as an administrative assistant. A warning may be provided to an IM recipient that the IM conversation is being recorded or viewed by others, as appropriate to the situation. By comparison, if the non-professional "Casual" personality is selected, the outgoing IM messages may not be encrypted and no copy is recorded or forwarded.

[0105] As a further example, if the "Work" personality is selected and the IM sender indicates an unavailability to receive instant messages (e.g., through selection of an "away" message or by going offline), then messages received from others during periods of unavailability may be forwarded to another IM recipient such as an administrative assistant, or may be forwarded to an e-mail address for the IM sender. By comparison, if the non-professional "Casual" personality is selected, no extra measures are taken to ensure delivery of the message.

[0106] In one implementation, the features and functionality associated with the personality would be transparent to the IM sender, and may be based upon one or more pre-selected profiles types when setting up the personality. For example, the IM sender may be asked to choose from a group of personality types such as professional, management, informal, vacation, offbeat, etc. In the example above, the "Work" personality may have been be set up as a "professional" personality type and the "Casual" personality may have been set up as an "informal" personality type. In another implementation, the IM sender may individually select the features and functionalities associated with the personality.

[0107] An "enterprise mode" may be provided for use with a personality, and the features and functionality associated with the enterprise mode may be established by an employer or its agent, and may vary depending upon the requirements of the environment. For example, where a record of the IM conversation is being maintained, a legal notice may be provided to one or more of the participants in the IM conversation, where such notice is necessary or desirable. The enterprise mode may enable functionality such as encryption, recording of the IM conversation, and forwarding of the IM conversation to an administrative assistant.

[0108] In one implementation, the IM recipient and/or the IM sender may pay a subscription fee to access/use certain personalities, and the personalities may be provided by a third party. In another implementation, the personalities expire and must be replaced after a predetermined event such as a predetermined length of time, passage of a predetermined date, or a predetermined number of uses. Also, a personality may be banned if, for example, it is deemed to be offensive, inappropriate, or to otherwise violate a term of service agreement. If it is determined that the personality is expired or banned, display of such a personality will be disallowed and the IM sender typically will be required to choose a different personality.

[0109] Default global personalization items, default group personalization items, or default personal personalization items, may be provided, depending on the implementation. For example, if the Buddies buddy group is provided as a default upon installation of the instant messaging client program, a default group personalization item also may be provided for the Buddies buddy group. As another example, a default global personalization item may be provided when the instant messaging client program is installed so that a personalization item always exists for the IM recipients, regardless of whether a IM sender has selected a personality or personalization item to be presented. Similarly, a default group personalization item may be provided for any default buddy groups and newly created buddy groups, whether or not a global personalization item is provided. This enables a personality to always exist for IM recipients even when no global personalization item or personality exists, regardless of whether a IM sender has set a group personalization item (or personal personalization item, if implemented also). Features and functionality may be assigned to personalities in a similar manner as described with respect to self-expression items.

[0110] Referring again to FIG. **5**, the personality is then stored (step **510**). The personality may be stored on the IM sender system **205**, on the IM host system **410**, or on a different host system **210** such as a host system of an authorized partner.

[0111] Next the IM sender assigns a personality to be projected during future IM sessions or when engaged in future IM conversations with an IM recipient (step **515**). The IM sender may wish to display different personalities to different IM recipients and/or groups in the buddy list. The IM sender may use a user interface to assign personalization items to personalities on at least a per-buddy group basis. For example, an IM sender may assign a global buddy icon to all personalities, but assign different buddy sounds on a per-group basis to other personalities (e.g. work, family, friends), and assign buddy wallpaper and smileys on an individual basis to individual personalities corresponding to particular IM recipients within a group. The IM sender may assign other personality attributes based upon the occurrence of certain predetermined events or triggers. For example, certain potential IM recipients may be designated to see certain aspects of the Rainy Day personality if the weather indicates rain at the geographic location of the IM sender. Default priority rules may be implemented to resolve conflicts, or the user may select priority rules to resolve conflicts among personalities being projected or among self-expression items being projected for an amalgamated personality.

[0112] For example, a set of default priority rules may resolve conflicts among assigned personalities by assigning the highest Priority to personalities and self-expression items of personalities assigned on an individual basis, assigning the next highest priority to assignments of personalities and personalization items made on a group basis, and assigning the lowest priority to assignments of personalities and personalization items made on a global basis. However, the user may be given the option to override these default priority rules and assign different priority rules for resolving conflicts.

[0113] As shown in FIG. **13**A, a UI **1300**A may be provided to enable the IM sender to assign a persona to be projected and to select rules for resolving conflicts among the personas to be projected. The UI **1300**A includes an assignment portion **1305**A and a priority rule portion **1310**A. The assignment portion **1305**A includes controls to enable the IM sender to assign a persona as a global or default persona **1315**, assign a persona to a group of potential IM recipients **1320**, assign a

persona to an individual IM recipient **1325**, and assign a persona based upon other criteria **1330**.

[0114] In particular, the global or default controls **1315** may include a drop down menu **1316** to enable the IM sender to select a default persona and may include one or more self-expression drop down menus **1317** to enable the IM sender to select one or more default personalization items to be projected. The group controls **1320** may include a drop down menu **1321** to enable the IM sender to select a persona to be projected to a group and may include one or more self-expression drop down menus **1322** to enable the IM sender to select one or more personalization items to be projected to a group. Association arrows **1323** and a Group list **1324** may be used to match the selected persona and/or self-expression items with a particular group. The individual controls **1325** may include a drop down menu **1326** to enable the IM sender to select a persona to be projected to an individual and may include one or more self-expression drop down menus **1327** to enable the IM sender to select one or more personalization items to be projected to an individual. Association arrows **1328** and an Individual list **1329** may be used to match the selected persona and/or self-expression items with a particular individual. The other criteria controls **1330** may include a drop down menu **1331** to enable the IM sender to select a type of criteria or trigger, a drop down menu **1332** to enable the IM sender to select a persona to be projected based upon other criteria and may include one or more self-expression drop down menus **1333** to enable the IM sender to select one or more personalization items to be projected based on other criteria. The other criteria may include, for example, weather at the IM sender location, a day of the week, a time of day, a holiday, a calendar event, a week day or a weekend day.

[0115] The priority rules portion **1310**A includes priority rule controls **1340** to enable the IM sender to select priority rules to resolve conflicts between personas or self-expression items or functionality within personas. The controls **1340** may include a drop down menu **1341** to choose pre-defined sets of rules or a UI control **1342** to enable the user to define custom priority rules.

[0116] As shown in FIG. **13**B, a UI **1300**B may be provided to enable the IM sender to assign a persona to be projected and to select rules for resolving conflicts among the personas to be projected. The persona includes functionality that may be selected by the user or selected automatically for the user. The UI **1300**B is similar to UI **1300**A, and includes an assignment portion **1305**B and a priority rule portion **1310**B. The assignment portion **1305**B includes controls to enable the IM sender to assign a persona as a global or default persona **1350**, assign a persona to a group of potential IM recipients **1360**, assign a persona to an individual IM recipient **1370**, and assign a persona based upon other criteria **1380**. Functionality may be assigned to a persona through user manipulation of the UI **1300**B, or by default or automatic selection. For example, a personality selected for a "work" buddy list group or buddies within the "work" buddy list group may automatically invoke a recording function by default, whereas a "family" buddy list group may not. The functionality may be assigned by selection or by default buddy list groups provided during installation of the instant messaging client, and may be enabled in response to a suggested configuration setting during installation of the instant messaging client.

[0117] In particular, the global or default controls **1350** may include a drop down menu **1351** to enable the IM sender to select a default persona and may include one or more functionality menu items **1355** to enable the IM sender to select one or more default functionalities to be projected with the persona. The group controls **1360** may include a drop down menu **1361** to enable the IM sender to select a persona to be projected to a group and may include one or more functionality menu items **1365** to enable the IM sender to select one or more functionalities to be projected with the persona to a group. Association arrows **1367** and a Group list **1369** may be used to match the selected persona and/or functionalities with a particular group. The individual controls **1370** may include a drop down menu **1371** to enable the IM sender to select a persona to be projected to an individual and may include one or more functionality menu items **1375** to enable the IM sender to select one or more functionalities to be projected with the persona to an individual. Association arrows **1377** and an Individual list **1379** may be used to match the selected persona and/or functionalities with a particular individual. The other criteria controls **1380** may include a drop down menu **1381** to enable the IM sender to select a type of criteria or trigger, a drop down menu **1382** to enable the IM sender to select a persona to be projected based upon other criteria and may include one or more functionality menu items **1385** to enable the IM sender to select one or more functionalities to be projected with the persona based on other criteria. The other criteria may include, for example, weather at the IM sender location, a day of the week, a time of day, a holiday, a calendar event, a week day or a weekend day.

[0118] The priority rules portion **1310**B includes priority rule controls **1390** to enable the IM sender to select priority rules to resolve conflicts between personas or functionality within personas. The controls **1390** may include a drop down menu **1391** to choose pre-defined sets of rules or a UI control **1392** to enable the user to define custom priority rules.

[0119] To set a personality for a buddy-group, the IM sender may use the interface to select the buddy group and assign the personality that will be presented to all IM recipients that belong to the selected buddy group. In other implementations, the IM sender may be able to use the interface to set a global personalization item and/or personality on a per-buddy basis. A global personalization item is typically implemented as a default personalization item sent to a buddy if no other type of personalization item (e.g., buddy icon, buddy wallpaper, buddy sound, or smiley) is set for the buddy on a group or an individual basis. A personalization item may be set for a particular group and used for members of the group, or may be set for an individual buddy and used for that buddy. Typically, an individual (personal) personalization item selection overrides a selection for a group personalization item, and a group personalization item selection overrides a selection for a global personalization item. Similarly, an individual (personal) personality selection overrides a selection for a group personality, and a group personality selection overrides a selection for a global personality.

[0120] In some implementations that allow for global personalization items, the group personalization item set for a buddy group optionally may be set by overriding the global personalization item with a new personalization item. For example, if the global buddy icon is set to a bear, and a buddy group personalization item for the "co-worker" group may be set to a beaver, the personalization item presented to IM recipients in the "co-worker" buddy group would be a beaver, while the personalization item presented to IM recipients in other groups would default to the global buddy icon, a bear.

Similarly, in some implementations, an individual (personal) personalization item may be set by overriding a group personalization item or a global personalization item for particular IM recipients.

[0121] Next, an IM session between the IM sender and the IM recipient is initiated (step **520**). The IM session may be initiated by either the IM sender or the IM recipient.

[0122] An IM UI is rendered to the IM recipient, configured to project the personality assigned to the IM recipient by the IM sender (step **525**), as illustrated, for example, by FIG. **8**.

[0123] The appropriate personality/personalization item set for a buddy is sent to the buddy when the buddy communicates with the IM sender through the instant messaging client program. For example, in an implementation which supports global personalization items, group personalization items, and personal personalization items, a personal personalization item is sent to the buddy if set, otherwise a group personalization item is sent, if set. If neither a personal nor a group personalization item is set, then the global personalization item is sent. As another example, in an implementation that supports global personalization items and group personalization items, the group personalization item for the group to which the buddy belongs is sent, if set, otherwise the global personalization item is sent. In an implementation that only supports group personalization items, the group personalization item for the group to which the buddy belongs is sent to the buddy.

[0124] An IM session between the IM sender and another IM recipient also may be initiated (step **530**) by either the IM sender or the second IM recipient.

[0125] Relative to the second IM session, a second IM UI is rendered to the second IM recipient, configured to project the personality assigned to the second IM recipient by the IM sender (step **535**), as illustrated by FIG. **1** where the IM session are concurrently opened and again by FIG. **8** otherwise. The personality may be projected in a similar manner to that described above with respect to step **525**. However, the personality projected to the second IM recipient may differ from the personality projected to the first IM recipient described above in step **525**.

[0126] Referring to FIG. **6**, an exemplary procedure **600** enables an IM sender to change a personality assigned to an IM recipient. In procedure **600**, a user selection of a new personality to be assigned to the IM recipient is received (step **605**). The change may be received through an IM chooser **1000**, such as that discussed above with respect to FIG. **10**, and may include choosing self-expression items and/or features and functionality using such as interface or may include "snagging" a personality of the buddy using such an interface. Snagging a personality refers to the appropriation by the IM sender of one or more personalization items used by the IM recipient. Typically, all personalization items in the personality of the IM recipient are appropriated by the IM sender when "snagging" a personality.

[0127] Next, the updated UI for that buddy is updated based on the newly selected personality (step **610**).

[0128] FIG. **14** illustrates a communications system **1400** including an IM sender system **205** communicating with an IM recipient system **405** and an IM host system **410** through a communication link **215**. System **1400** illustrates a possible implementation of the communications system **400** of FIG. **4**.

[0129] In system **1400**, the IM host system **410** includes a login server **1470** for enabling access by IM senders and routing communications between the IM sender system **205** and other elements of the IM host system **410**. The IM host system **410** also includes an IM server **1490**.

[0130] To enable access to and facilitate interactions with the IM host system **410**, the IM sender system **205** and the IM recipient system **405** may include communication software, such as for example, an OSP client application and/or an IM client application.

[0131] As described with respect to FIG. **4**, the IM host system **410** may support IM services irrespective of an IM sender's network or Internet access. Thus, the IM host system **410** may allow IM senders to send and receive IMs, regardless of whether they have access to any particular ISP. The IM host system **410** also may support associated services, such as administrative matters, advertising, directory services, chat, and interest groups related to the IM. The IM host system **410** has an architecture that enables the devices (e.g., servers) within the IM host system **410** to communicate with each other. To transfer data, the IM host system **410** employs one or more standard or exclusive IM protocols.

[0132] In one implementation, the IM sender system **205** establishes a connection to the login server **1470** in order to access the IM host system **410** and begin an IM session. The login server **1470** typically determines whether the particular IM sender is authorized to access the IM host system **410** by verifying the IM sender's identification and password. If the IM sender is authorized to access the IM host system **410**, the login server **1470** usually employs a hashing technique on the IM sender's screen name to identify a particular IM server **1490** within the IM host system **410** for use during the IM sender's session. The login server **1470** provides the IM sender (e.g., IM sender system **205**) with the IP address of the IM server **1490**, gives the IM sender system **205** an encrypted key, and breaks the connection. The IM sender system **205** then uses the IP address to establish a connection to the particular IM server **1490** through the communications link **215**, and obtains access to the IM server **1490** using the encrypted key. Typically, the IM sender system **205** will be able to establish an open TCP connection to the IM server **1490**. The IM recipient system **405** establishes a connection to the IM host system **310** in a similar manner.

[0133] In one implementation, the IM sender system **205** may directly or indirectly transmit data to and access content from the IM server **1490** once a connection to the IM server **1490** has been established. By accessing the IM server, an IM sender can leverage the IM client application to determine whether particular IM senders ("buddies" or potential IM recipients) are online, exchange IMs with particular IM recipients, participate in group chat rooms, trade files such as pictures, invitations or documents, find other IM recipients with similar interests, get customized news and stock quotes, and search the Web. For example an IM sender who is using IM sender system **205** may view whether a buddy using IM recipient system **405** is online, and if so, may exchange IMs with that buddy. In one implementation, the IMs sent between IM sender system **205** and IM recipient system **405** are routed through IM host system **410**. In another implementation, the IMs sent between IM sender system **205** and IM recipient system **405** are routed through a third party server (not shown) and, in some cases, are also routed through IM host system **410**. In yet another implementation, the IMs are sent directly between IM sender system **205** and IM recipient system **405**.

[0134] In one implementation, the IM host system **410** also includes a user profile server (not shown) connected to a

database (not shown) for storing large amounts of user profile data. The user profile server may be used to enter, retrieve, edit, manipulate, or otherwise process user profile data. In one implementation, an IM sender's profile data includes, for example, the IM sender's screen name, buddy list, identified interests, and geographic location. The IM sender's profile data may also include self-expression items selected by the IM sender. The IM sender may enter, edit and/or delete profile data using an installed IM client application on the IM sender system **205** to interact with the user profile server.

[0135] Because the IM sender's data are stored in the IM host system **410**, the IM sender does not have to reenter or update such information in the event that the IM sender accesses the IM host system **410** using a new or different IM sender system **205**. Accordingly, when an IM sender accesses the IM host system **410**, the IM server can to instruct the user profile server to retrieve the IM sender's profile data from the database and to provide, for example, the IM sender's self-expression items and buddy list to the IM server. Alternatively, user profile data may be saved locally on the IM sender system **205**.

[0136] Instant messaging programs typically allow IM senders to communicate in real-time with each other in a variety of ways. For example, many instant messaging programs allow IM senders to send text as an instant message, to transfer files, and to communicate by voice. Examples of IM communications exist over AIM (America Online Instant Messenger), AOL (America Online) Buddy List and Instant Messages, Yahoo Messenger, MSN Messenger, and ICQ, among others. Although discussed above primarily with respect to IM applications, other implementations are contemplated for providing similar functionality in platforms and online applications such as chat, e-mail, and streaming media applications. Other implementations are within the scope of the following claims. For example, although the examples above are given in an instant message context, other communications systems with similar attributes may be used. For example, multiple personalities may be used in a chat room or in e-mail communications. Also, the user interface may be a viewable interface, an audible interface, a tactile interface, or a combination of these.

1.-111. (canceled)

112. A system comprising:

at least one processor;

memory, operatively connected to the at least one processor and storing instructions that, when executed, cause the at least one processor to perform a method, the method comprising:

upon establishment of a first communications session with a first recipient, detecting first characteristic associated with the first recipient;

based on the first characteristic, employing a first functionality in the first communications session;

upon establishment of a second communications session with a second recipient, detecting second characteristic associated with the second recipient;

based on the second characteristic, employing a second functionality in the second communications session;

wherein the first functionality and the second functionality are different.

113. The system of claim **112** wherein the first functionality comprises encrypting messages sent by the first recipient during the first communications session.

114. The system of claim **112** wherein the first functionality comprises decrypting messages received by the first recipient during the first communications session.

115. The system of claim **112** wherein the first functionality comprises logging messages sent and received to the first recipient during the first communications session.

116. The system of claim **112** wherein the first functionality further comprises providing a notification concerning the message logging to the first recipient.

117. The system of claim **112**, wherein the first functionality comprises routing a message received during the first communications session.

118. A computer implemented method comprising:

establishing a first communication session with a first recipient;

upon establishment of the first communications session with the first recipient, detecting first characteristic associated with the first recipient;

based on the first characteristic, employing a first functionality in the first communications session;

establishing a second communication session with a second recipient;

upon establishment of the second communications session with the second recipient, detecting second characteristic associated with the second recipient;

based on the second characteristic, employing a second functionality in the second communications session;

wherein the first functionality and the second functionality are different.

119. The method of claim **118**, wherein the first functionality comprises encrypting messages sent by the first recipient during the first communications session.

120. The method of claim **118**, wherein the first functionality comprises decrypting messages received by the first recipient during the first communications session.

121. The method of claim **118**, wherein the first functionality comprises logging messages sent and received to the first recipient during the first communications session.

122. The method of claim **118**, wherein the first functionality further comprises providing a notification concerning the message logging to the first recipient.

123. The method of claim **118**, wherein the first functionality comprises routing a message received during the first communications session.

124. A computer readable storage device storing instructions that, when executed by at least one processor, cause the at least one processor to perform a method, the method comprising:

establishing a first communication session with a first recipient;

upon establishment of the first communications session with the first recipient, detecting first characteristic associated with the first recipient;

based on the first characteristic, employing a first functionality in the first communications session;

establishing a second communication session with a second recipient;

upon establishment of the second communications session with the second recipient, detecting second characteristic associated with the second recipient;

based on the second characteristic, employing a second functionality in the second communications session;

wherein the first functionality and the second functionality are different.

125. The device of claim **124**, wherein the first functionality comprises encrypting messages sent by the first recipient during the first communications session.

126. The device of claim **124**, wherein the first functionality comprises decrypting messages received by the first recipient during the first communications session.

127. The device of claim **124**, wherein the first functionality comprises logging messages sent and received to the first recipient during the first communications session.

128. The device of claim **124**, wherein the first functionality further comprises providing a notification concerning the message logging to the first recipient.

129. The device of claim **124**, wherein the first functionality comprises routing a message received during the first communications session.

130. The device of claim **124**, wherein routing the message comprises routing of the message over a communications mode other than is used during the second communications session.

* * * * *